RC10 B74.2 TEAM KIT

Driver: _____ Event: _____
Date: _____ Track: _____
Qualify: _____ TQ: ☐ Main: _____ Finish: _____ Best Lap Time: _____

Front Suspension

Ride Height:
Camber:
Toe:
Anti-Roll Bar:
Arm Type:
Tower Type:
Wheelbase Shim:
Wheel Hex:
Caster Block: 8° ☐ 9° ☐ 10° ☐
Chassis Brace Support:
Top Plate Brace:
Front Axles: CVA ☐ DCV ☐

Notes

Front Chassis Brace Screws

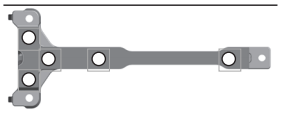

Arm Mount A

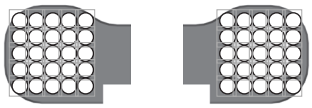

Arm Mount B

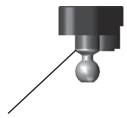

Ball Stud Spacing: _____

Axle Height: +3 ☐ +2 ☐ +1 ☐ 0 ☐
Ball Stud Spacing: _____
Steering Plate: _____

Diff Height

Ball Stud Spacing: _____

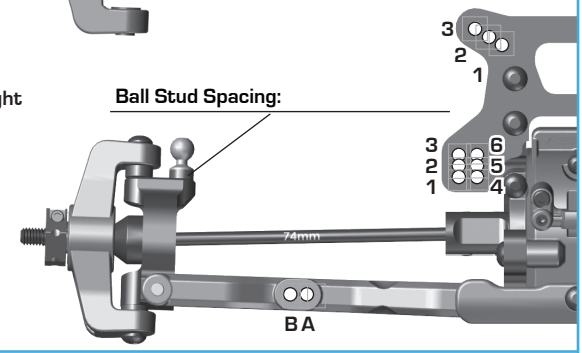

Rear Suspension

Ride Height:
Camber:
Anti-Roll Bar:
Arm Type:
Wheelbase Shim:
Wheel Hex:
CVA Bone Length:
Chassis Brace Support:
Hub Spacing: Fwd ☐ Mid ☐ Back ☐

Notes

Rear Chassis Brace Screws:

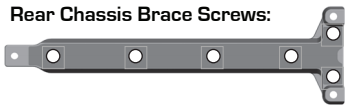

Arm Mount C

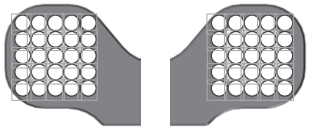

Arm Mount D

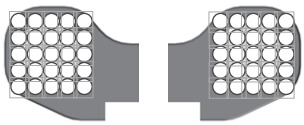

Axle Height:

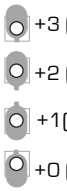

Vertical Ball Stud Mount

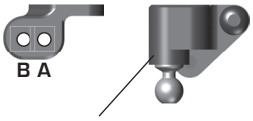

Ball Stud Spacing: _____

Diff. Height

Camber Link Spacing: _____
Ball Stud Spacing: _____

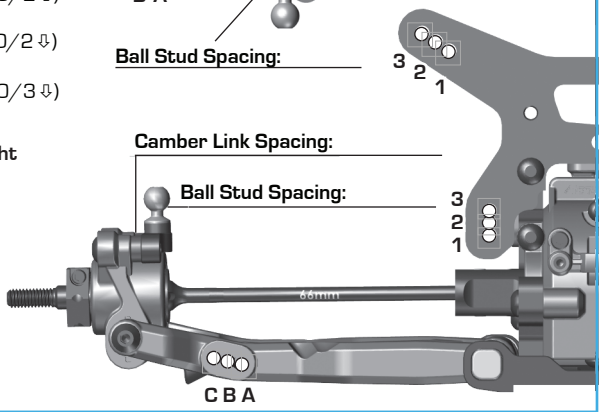

Electronics, Drivetrain

Radio: _____ Servo: _____
EPA: Throttle: % Brake: %
ESC:
ESC Settings:
Motor: _____ Timing: _____
Pinion: _____ Spur: _____
Battery: Back 1 ☐ 2 ☐ 3 ☐ 4 ☐ Fwd
Battery Position:

Diffs	Front	Center	Rear
Fluid			
Gears			
Type			

Notes

Slipper Clutch:
# of Pads

Shocks	Front	Rear
Piston:		
Fluid:		
Spring:		
Limiters:	Int: ____ Ext: ____	Int: ____ Ext: ____
Stroke:		
Eyelet Length:		
Cup Offset:		

Notes

www.PetitRC.com

Track Info, Tires & Aero

Layout: Tight ☐ Mixed ☐ Open ☐ Extra Large ☐
Surface: Dirt ☐ Carpet ☐ Astroturf ☐ ☐
Traction: Low ☐ Medium ☐ High ☐ Very High ☐
Moisture: Dry ☐ Damp ☐ Wet ☐
Condition: Indoor ☐ Outdoor ☐ Dusty ☐ Hard Packed ☐
Bumpy ☐ Grooved ☐ Smooth ☐ Loamy ☐
Temperature: Ambient: Humidity:

Notes

Front Tires:
Front Compound:
Front Insert:
Rear Tires:
Rear Compound:
Rear Insert:
Wheel (F/R):

Notes

Body:
Rear Wing:
Wing Angle: 0° ☐ 6° ☐
Wing Mount Height: 0 ☐ -2 ☐
Front Wing Yes ☐ No ☐
Servo Weights:
Electronic Weights:
Total Vehicle Weight:

Comments