PRS1V3TR

Arn0 - PetitRC.com

Name _____ Date _____ Track/City _____ Event _____

Front Suspension

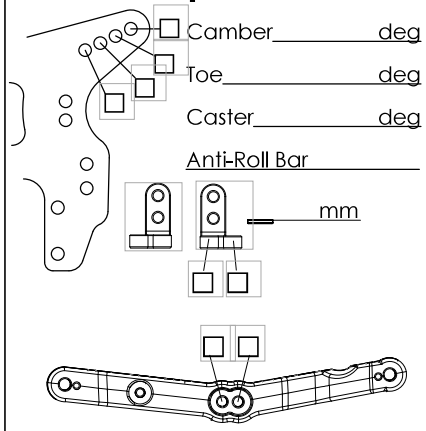

☐ Camber _____ deg

Toe _____ deg

Caster _____ deg

Anti-Roll Bar _____

mm

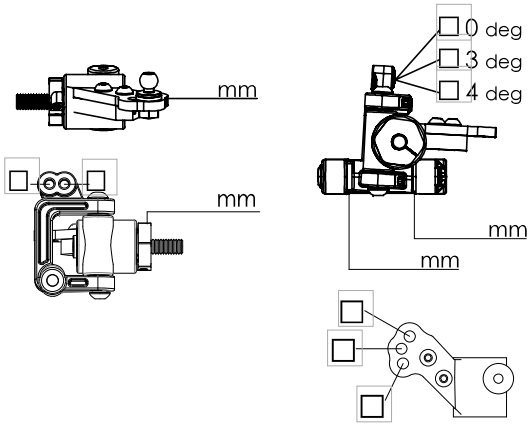

Shock Oil _____

Shock Piston _____

Spring _____

Preload _____ mm

O-Ring ☐ Blue ☐ Red

Limiters

Inside _____ mm

Outside _____ mm

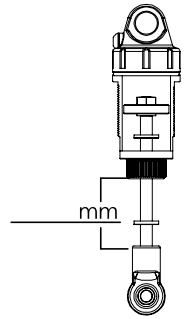

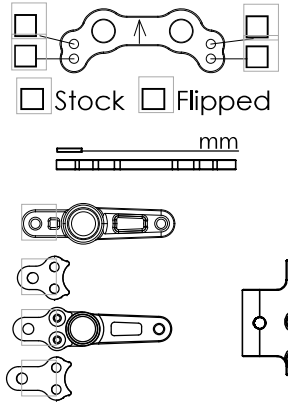

☐ Stock ☐ Flipped

mm

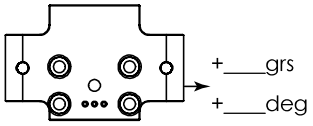

+____grs

+____deg

Notes

Rear Suspension

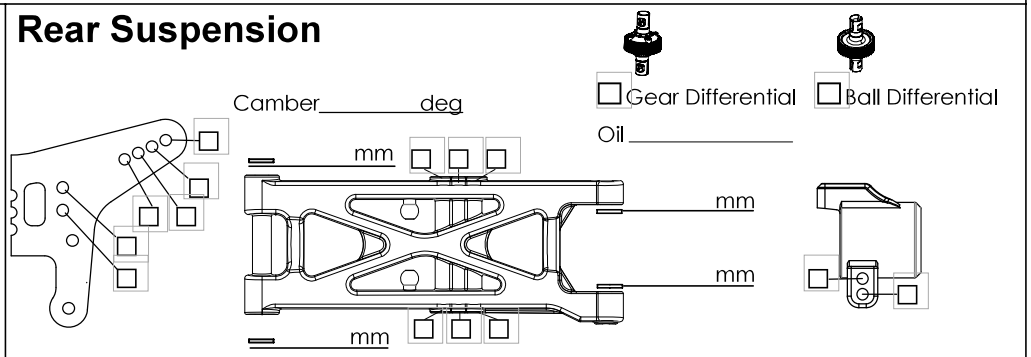

☐ Gear Differential ☐ Ball Differential

Oil _____

Camber _____ deg

mm

mm

mm

mm

RF

RR+2mm

☐ 0

☐ +1

☐ +2

Fwd

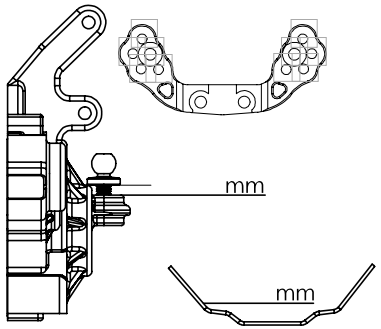

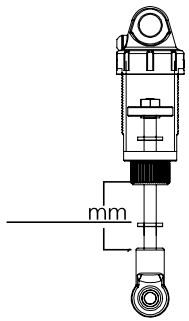

Shock Oil _____

Shock Piston _____

Spring _____

Preload _____ mm

O-Ring ☐ Blue ☐ Red

Limiters

Inside _____ mm

Outside _____ mm

Notes

Comments

Tires & Wheels

Front	Rear
Tire	Tire
Wheel	Wheel
Inserts	Inserts

Notes

Battery Position

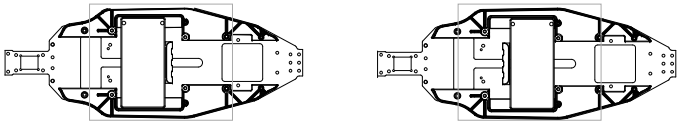

Temp

Humidity

Track Conditions

Composition: Astro ☐ Carpet ☐ Clay ☐ Dirt ☐ Grass ☐

Layout: Open ☐ Mixed ☐ Tight ☐

Traction: Low ☐ Medium ☐ High ☐

Surface: Smooth ☐ Bumpy ☐

Others

ESC _____

Motor _____

Battery _____

Pinion/Spur _____

Wing _____