# AWESOMATIX® A700 L & EX

## SETUP SHEET

*Alterations by Arn0 at PetitRC.com*

| | | | |
|---|---|---|---|
| NAME | -13,66/-13,53 mm RC | DATE | |
| COUNTRY | | TEMP.°C AIR / TRACK | °C / °C |
| RACE | | TRACK CONDITION | TECHNICAL ☑ CARPET ☑ MIXED ☑ ASPHALT ☐ FAST ☑ |
| TRACK | | TRACTION | LOW ☑ MEDIUM ☑ HIGH ☑ |

### FRONT

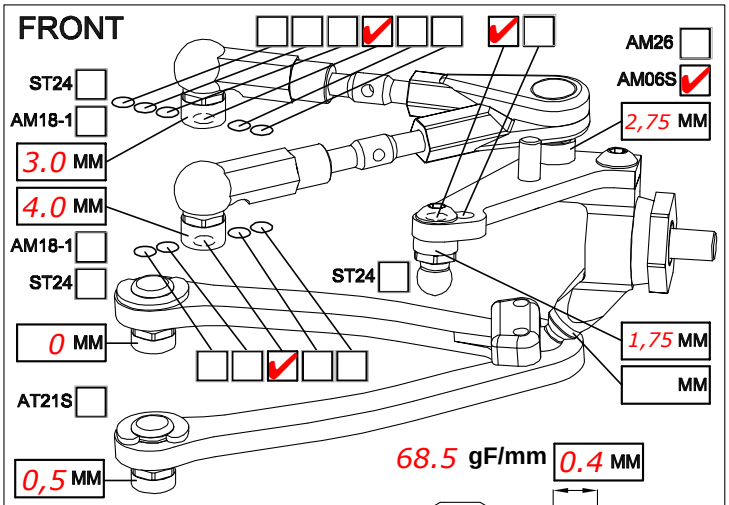


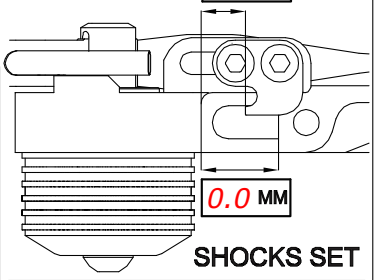


| | | | |
|---|---|---|---|
| CAMBER ANGLE / ° | 1 | | |
| CASTER ANGLE / ° | 6 | | |
| TOE ANGLE / ° | 1 | | |
| RIDE HEIGHT / MM | 5 | | |
| DOWNSTOP / MM | 6.3 | | |
| UPSTOP / MM | | | |
| STABILIZER Ø / MM | 1,2 | | |
| LOW ARM | STD ☑ | ☐ | |
| STEERING ARM | STD ☑ | ☐ | |
| WHEEL SPACER / MM | | | |

**SHOCKS SET**

| | | |
|---|---|---|
| SPRING | STD ☐ | S ☑ |
| DAMPER | # 6 ☑ | # 3 ☐ |
| ACTION | SYM. ☐ | ASYM. ☑ |
| SRS/RHS ARR. | I ☑ | II ☐ |

FRONT DRIVE: BALL DIFF ☐ GEAR DIFF ☐ SPOOL ☑ ONE-WAY ☐

DIFF SET: LOOSE ☐ MEDIUM ☐ TIGHT ☐ OIL ☐ #

DOGBONE DRIVE: BUSHING ☑ C-DRIVE ☐ BB ☐ EVD ☑

### REAR

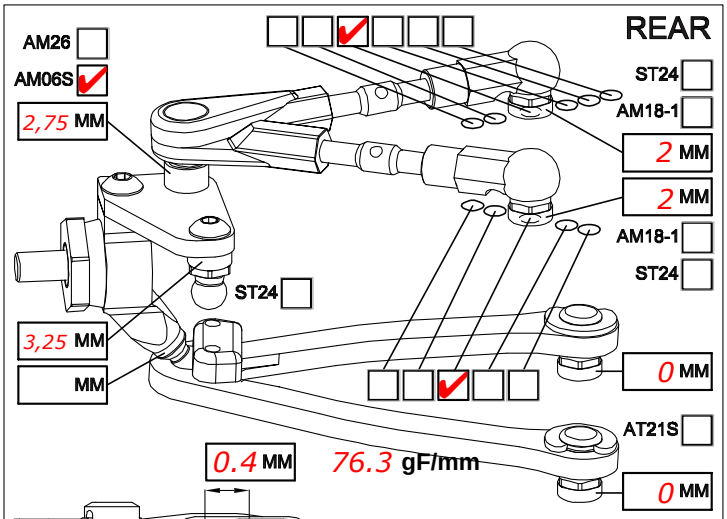


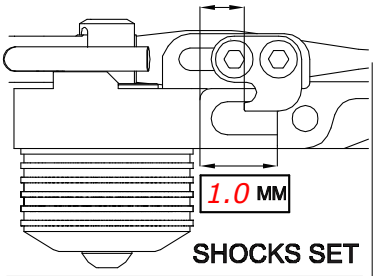


| | | | |
|---|---|---|---|
| CAMBER ANGLE / ° | 1.5 | | |
| CASTER ANGLE / ° | 3 | | |
| TOE ANGLE / ° | 3 | | |
| RIDE HEIGHT / MM | 5,2 | | |
| DOWNSTOP / MM | 4.6 | | |
| UPSTOP / MM | | | |
| STABILIZER Ø / MM | 1,2 | | |
| LOW ARM | STD ☑ | ☐ | |
| STEERING ARM | STD ☑ | ☐ | |
| WHEEL SPACER / MM | | | |

**SHOCKS SET**

| | | |
|---|---|---|
| SPRING | STD ☐ | S ☑ |
| DAMPER | # 6 ☑ | # 3 ☐ |
| ACTION | SYM. ☐ | ASYM. ☑ |
| SRS/RHS ARR. | I ☑ | II ☐ |

REAR DRIVE: BALL DIFF ☐ GEAR DIFF ☑

DIFF SET: LOOSE ☐ MEDIUM ☐ TIGHT ☐ OIL ☐ # 2000

DOGBONE DRIVE: BUSHING ☑ C-DRIVE ☐ BB ☐ EVD ☐

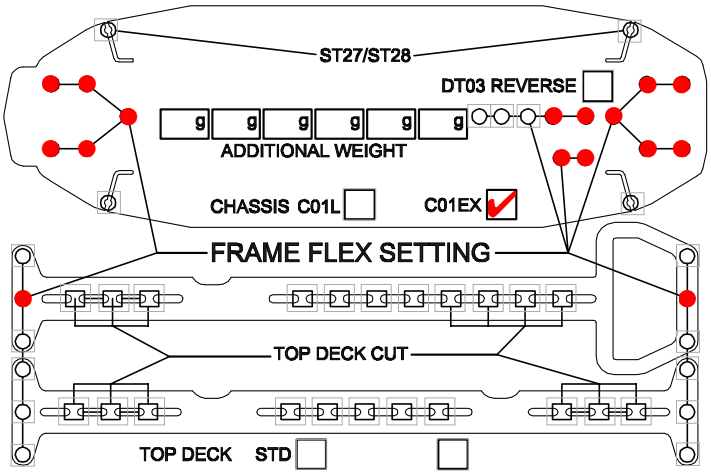


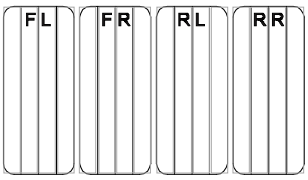


| TIRES | FRONT | REAR |
|---|---|---|
| BRAND | | |
| INSERTS | | |
| WHEELS | | |
| ADDITIVE | | |

| | | | |
|---|---|---|---|
| MOTOR LAYOUT | LONG. ☐ | TRANS. ☐ | MOTOR |
| SERVO LAYOUT | LEFT ☐ | RIGHT ☐ | SERVO |
| ESC LAYOUT | LEFT ☐ | RIGHT ☐ | ESC |
| BAT. LAYOUT | R1 ☑ R2 ☐ | F1 ☐ F2 ☐ | BATTERY |
| SPUR | PINION | | RECEIVER |
| FINAL DRIVE RATIO | | | MOTOR OFFSET / MM |
| BODY | | | WING |

### STEERING POST

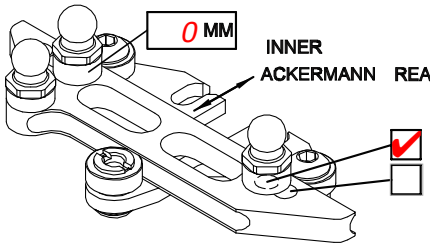


REARWARD ☐ FORWARD ☑

AM24 OFFSET ☐

AM24 CENTERED ☑

ST24 ☐

| | |
|---|---|
| BEST LAPTIME | QUALIF. / FINAL POSITION / |
| ESC SETTING | |
| COMMENTS / IMPRESSIONS | |
| CONTACT | |