AWESOMATIX® A700 L & EX

SETUP SHEET

Alterations by Arn0 at PetitRC.com

NAME	Mike Gee	DATE	5/18
COUNTRY	USA	TEMP.°C AIR / TRACK	70 /
RACE	Roar Region 2 Outdoor Series Leg 1		
TRACK	Debbies RC		

		CARPET ☐		ASPHALT ☑
TRACK CONDITION	TECHNICAL ☐	MIXED ☑		FAST ☐
TRACTION	LOW ☐	MEDIUM ☑		HIGH ☑

FRONT

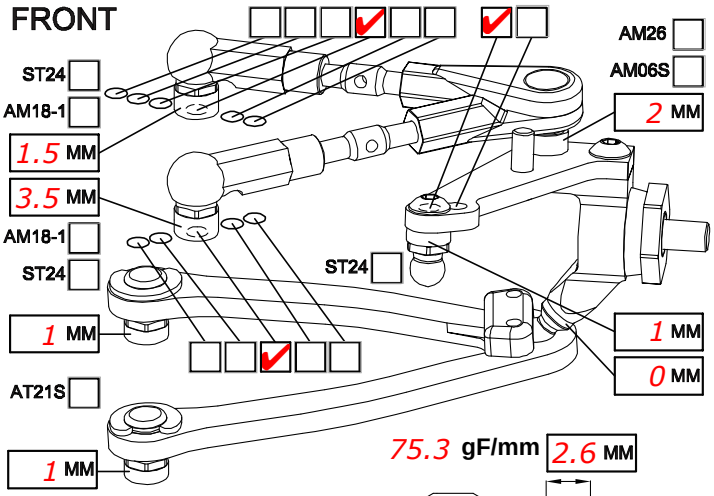

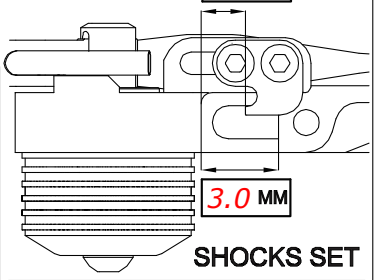

CAMBER ANGLE / °	2		
CASTER ANGLE / °	6		
TOE ANGLE / °	1 out		
RIDE HEIGHT / MM	5		
DOWNSTOP / MM	2mm over		
UPSTOP / MM			
STABILIZER Ø / MM	1.3		
LOW ARM	STD ☑	☐	
STEERING ARM	STD ☑	☐	
WHEEL SPACER / MM	0		

SHOCKS SET

SPRING	STD ☐	S ☑
DAMPER	# 6 ☑	# 3 ☐
ACTION	SYM. ☐	ASYM. ☑
SRS/RHS ARR.	I ☑	II ☐

FRONT DRIVE	BALL DIFF ☐	GEAR DIFF ☐	SPOOL ☑	ONE-WAY ☐
DIFF SET	LOOSE ☐	MEDIUM ☐	TIGHT ☐	OIL ☐ #
DOGBONE DRIVE	BUSHING ☑	C-DRIVE ☐	BB ☐	EVD ☑

REAR

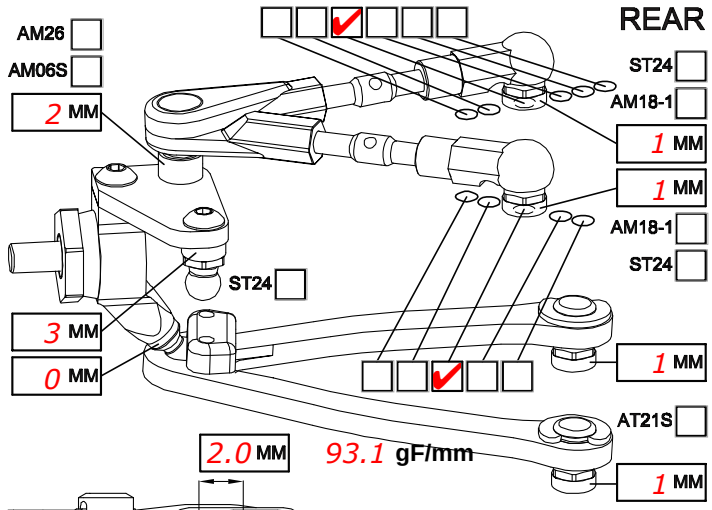

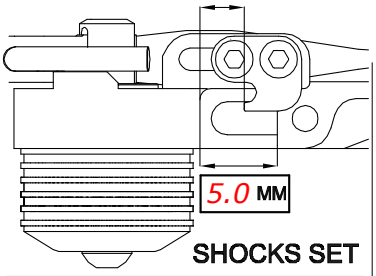

CAMBER ANGLE / °	2		
CASTER ANGLE / °	0		
TOE ANGLE / °	3		
RIDE HEIGHT / MM	5.2		
DOWNSTOP / MM	2mm over		
UPSTOP / MM			
STABILIZER Ø / MM	1.2		
LOW ARM	STD ☑	☐	
STEERING ARM	STD ☑	☐	
WHEEL SPACER / MM	0		

SHOCKS SET

SPRING	STD ☐	S ☑
DAMPER	# 6 ☑	# 3 ☐
ACTION	SYM. ☐	ASYM. ☑
SRS/RHS ARR.	I ☑	II ☐

REAR DRIVE	BALL DIFF ☐		GEAR DIFF ☑	
DIFF SET	LOOSE ☐	MEDIUM ☐	TIGHT ☐	OIL ☐ # 2000
DOGBONE DRIVE	BUSHING ☑	C-DRIVE ☐	BB ☐	EVD ☐

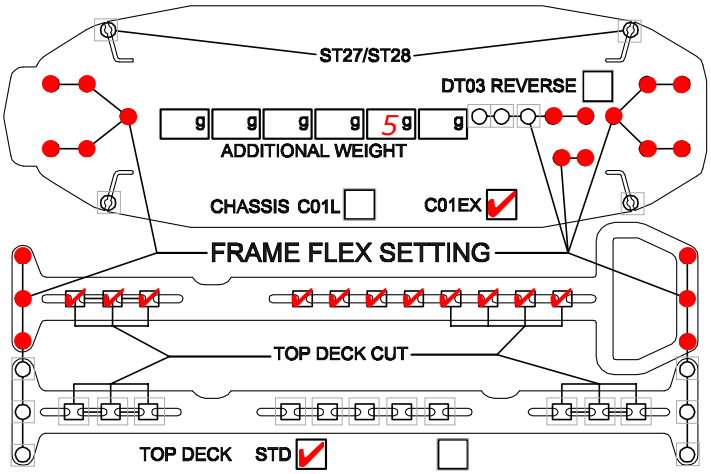

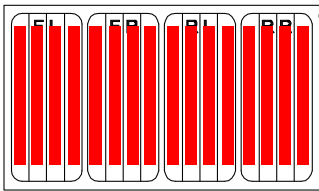

TIRES	FRONT	REAR
BRAND	Sweep OG	Sweep OG
INSERTS		
WHEELS		
ADDITIVE	FX2	FX2

MOTOR LAYOUT	LONG. ☑	TRANS. ☐		MOTOR	Reedy 5.0
SERVO LAYOUT	LEFT ☑	RIGHT ☐		SERVO	
ESC LAYOUT	LEFT ☑	RIGHT ☐		ESC	LRP Flow
BAT. LAYOUT	R1 ☐ R2 ☐	F1 ☑ F2 ☐		BATTERY	Psycho Cells 7200
SPUR 96	PINION			RECEIVER	
FINAL DRIVE RATIO				MOTOR OFFSET / MM	
BODY LTCR LW				WING	

STEERING POST

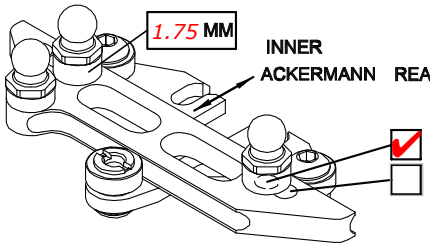

REARWARD ☐	FORWARD ☑	
AM24 OFFSET ☐		
AM24 CENTERED ☐		
ST24 ☐		

BEST LAPTIME	QUALIF. / FINAL POSITION /
ESC SETTING	
COMMENTS / IMPRESSIONS	FX2 1st run, LG2 2nd run
Shims are actual amount of shims	
CONTACT	