AWESOMATIX® A700 SETUP SHEET

NAME	Ragaut Hugo	DATE 24-06-12	TEMP.°C AIR / TRACK 22 / 30
COUNTRY	France		
RACE	French Nats Rd4		
TRACK	Vieux charmont		

			CARPET [ ]	ASPHALT [X]	
TRACK CONDITION	TECHNICAL [ ]		MIXED [ ]	FAST [X]	
TRACTION	LOW [ ]		MEDIUM [X]	HIGH [ ]	

FRONT

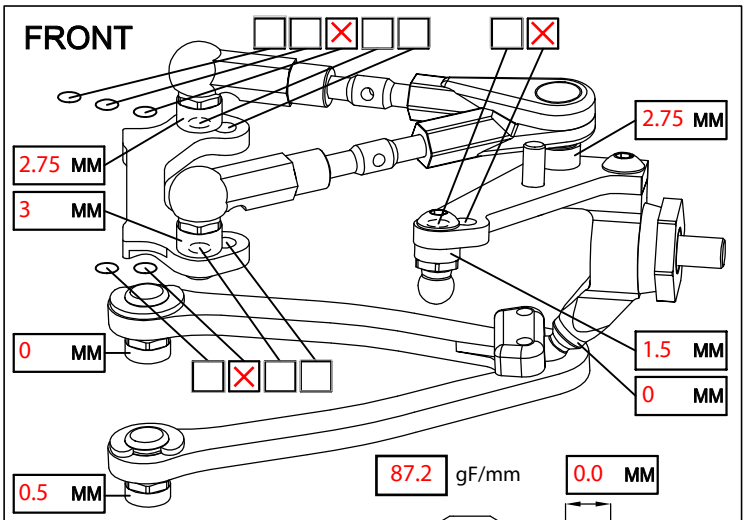

87.2 gF/mm

0.0 MM

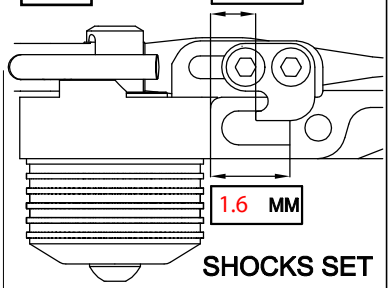

CAMBER ANGLE / °	1.5		
CASTER ANGLE / °	4		
TOE ANGLE / °	1.5 out		
RIDE HEIGHT / MM	5.4		
DOWNSTOP / MM	5.6		
UPSTOP / MM			
STABILIZER Ø / MM			
LOW ARM	STD [X]	[ ]	
STEERING ARM	STD [X]	[ ]	
WHEEL SPACER / MM			

SHOCKS SET

SPRING	STD [X]	[ ]
DAMPER	STD [X]	[ ]
ACTION	SYM. [ ]	ASYM. [X]
SRS/RHS ARR.	I [ ]	II [X]

FRONT DRIVE	BALL DIFF [ ]	GEAR DIFF [ ]	SPOOL [X]	ONE-WAY [ ]
DIFF SET	LOOSE [ ]	MEDIUM [ ]	TIGHT [ ]	OIL [ ] #
DOGBONE DRIVE	BUSHING [X]	C-DRIVE [ ]	BB [ ]	EVD [ ]

REAR

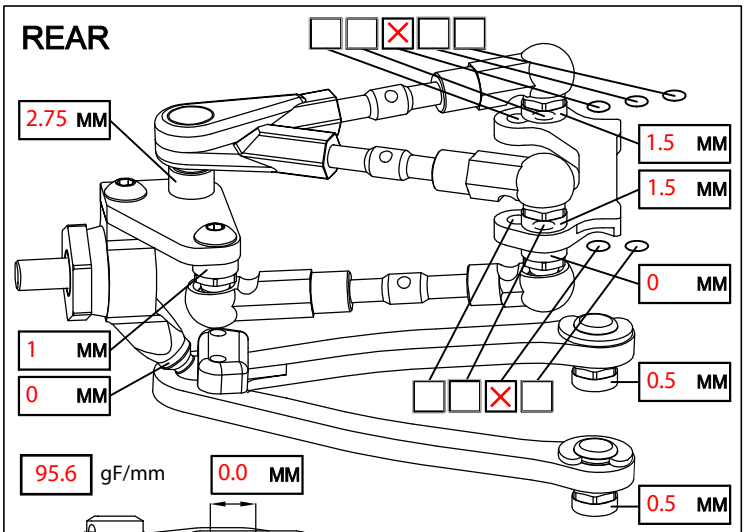

95.6 gF/mm

0.0 MM

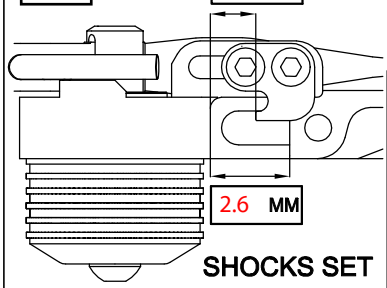

CAMBER ANGLE / °	2		
CASTER ANGLE / °	2		
TOE ANGLE / °	2.5		
RIDE HEIGHT / MM	5.6		
DOWNSTOP / MM	5		
UPSTOP / MM			
STABILIZER Ø / MM			
LOW ARM	STD [X]	[ ]	
STEERING ARM	STD [X]	[ ]	
WHEEL SPACER / MM			

SHOCKS SET

SPRING	STD [X]	[ ]
DAMPER	STD [X]	[ ]
ACTION	SYM. [ ]	ASYM. [X]
SRS/RHS ARR.	I [ ]	II [X]

REAR DRIVE	BALL DIFF [ ]	GEAR DIFF [X]		
DIFF SET	LOOSE [ ]	MEDIUM [ ]	TIGHT [ ]	OIL [X] # 5000
DOGBONE DRIVE	BUSHING [X]	C-DRIVE [ ]	BB [ ]	EVD [ ]

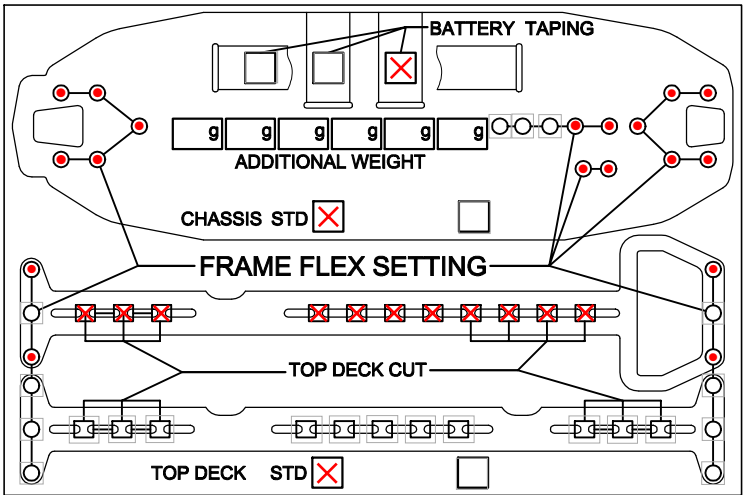

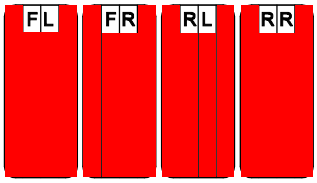

TIRES	FRONT	REAR
BRAND	Ride 36 FVRC	Ride 36 FVRC
INSERTS	Spec	Spec
WHEELS	Spec	Spec
ADDITIVE	MR	MR

MOTOR LAYOUT	LONG. [X]	TRANS. [ ]		MOTOR	LRP X20 4.5
SERVO LAYOUT	LEFT [X]	RIGHT [ ]		SERVO	Sanwa BLX
ESC LAYOUT	LEFT [X]	RIGHT [ ]		ESC	LRP SXX TC Spec V2
BAT. LAYOUT	R1 [X]	R2 [ ]	F1 [ ] F2 [ ]	BATTERY	LRP 6200 Big mama
SPUR	98	PINION	26	RECEIVER	Sanwa 451 R
FINAL DRIVE RATIO	7.8			MOTOR OFFSET / MM	
BODY	Mazda Speed 6			WING	Standard

STEERING POST

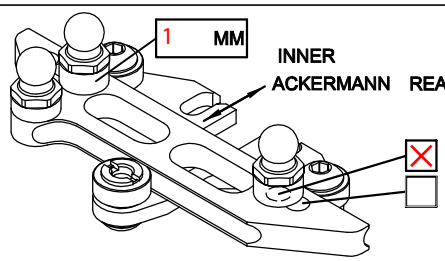

INNER ACKERMANN REARWARD [ ] FORWARD [X]

[X]

[ ]

Reset all

BEST LAPTIME	17.64	QUALIF. / FINAL POSITION	3 / 3

ESC SETTING

COMMENTS / IMPRESSIONS

Différentiel a l'avant (différentiel a bille avec graisse ofna ou differentiel a pinion avec pate ride)

CONTACT