AWESOMATIX® A700 L & EX

SETUP SHEET

Alterations by Arn0 at PetitRC.com

NAME	Tom Maquel	DATE	16/12/12
COUNTRY	France	TEMP.°C AIR / TRACK	°C / °C
RACE	GP3F		
TRACK	MRC longwy		

		CARPET ☑	ASPHALT ☐
TRACK CONDITION	TECHNICAL ☐	MIXED ☑	FAST ☐
TRACTION	LOW ☐	MEDIUM ☐	HIGH ☑

FRONT

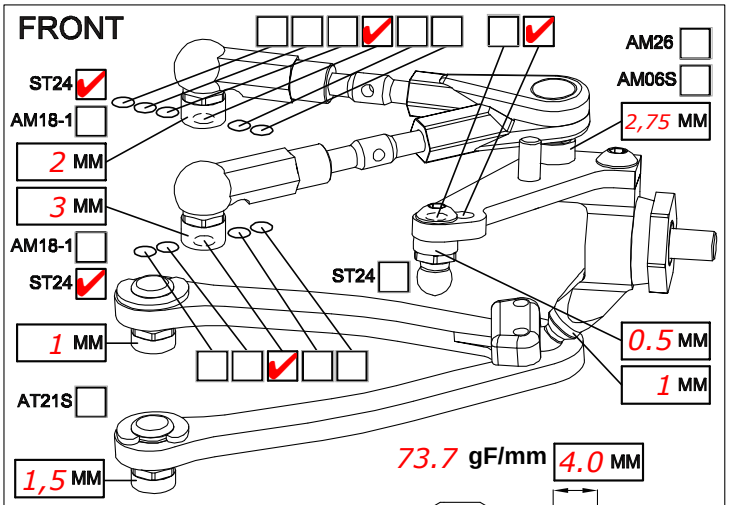

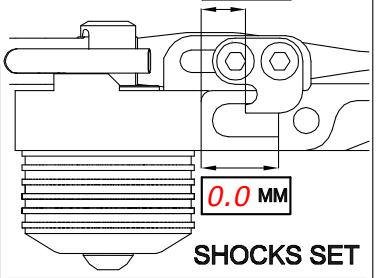

CAMBER ANGLE / °	L1,5/R2,0
CASTER ANGLE / °	4,5
TOE ANGLE / °	0.5
RIDE HEIGHT / MM	5
DOWNSTOP / MM	7
UPSTOP / MM	
STABILIZER Ø / MM	1.1
LOW ARM STD ☑ ☐	
STEERING ARM STD ☑ ☐	
WHEEL SPACER / MM	

SHOCKS SET

SPRING	STD ☑	S ☐		
DAMPER	# 6 ☑	# 3 ☐		
ACTION	SYM. ☐	ASYM. ☑		
SRS/RHS ARR.	I ☑	II ☐		

FRONT DRIVE	BALL DIFF ☐	GEAR DIFF ☐	SPOOL ☑	ONE-WAY ☐
DIFF SET	LOOSE ☐	MEDIUM ☐	TIGHT ☐	OIL ☐ #
DOGBONE DRIVE	BUSHING ☐	C-DRIVE ☐	BB ☑	EVD ☐

REAR

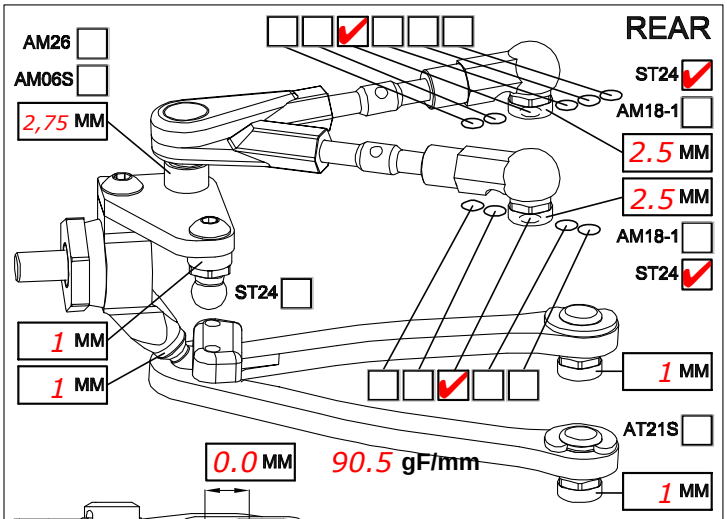

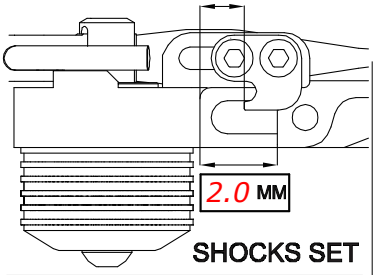

CAMBER ANGLE / °	2
CASTER ANGLE / °	4 (shorter)
TOE ANGLE / °	2
RIDE HEIGHT / MM	5
DOWNSTOP / MM	5,5
UPSTOP / MM	
STABILIZER Ø / MM	1.1
LOW ARM STD ☑ ☐	
STEERING ARM STD ☑ ☐	
WHEEL SPACER / MM	

SHOCKS SET

SPRING	STD ☑	S ☐		
DAMPER	# 6 ☑	# 3 ☐		
ACTION	SYM. ☐	ASYM. ☑		
SRS/RHS ARR.	I ☐	II ☑		

REAR DRIVE	BALL DIFF ☐	GEAR DIFF ☑		
DIFF SET	LOOSE ☐	MEDIUM ☐	TIGHT ☐	OIL ☑ # 2000
DOGBONE DRIVE	BUSHING ☐	C-DRIVE ☐	BB ☑	EVD ☐

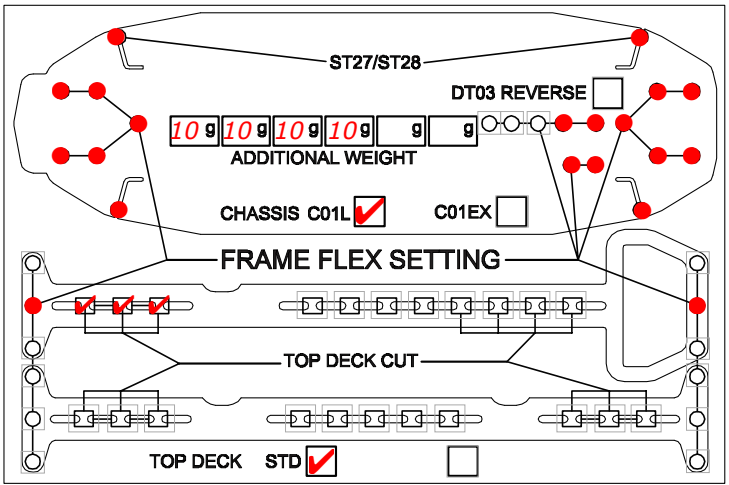

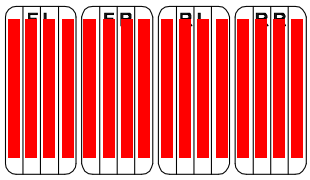

TIRES	FRONT	REAR
BRAND	LRP CPX	LRP CPX
INSERTS		
WHEELS		
ADDITIVE	CS high	CS high

MOTOR LAYOUT	LONG. ☑	TRANS. ☐			MOTOR
SERVO LAYOUT	LEFT ☑	RIGHT ☐			SERVO savöx
ESC LAYOUT	LEFT ☑	RIGHT ☐			ESC Hacker Tensoric
BAT. LAYOUT	R1 ☐	R2 ☑	F1 ☐	F2 ☐	BATTERY Hacker topfuel
SPUR 89	PINION 35				RECEIVER Sanwa
FINAL DRIVE RATIO					MOTOR OFFSET / MM
BODY PF mazda Speed 6					WING Standart

STEERING POST

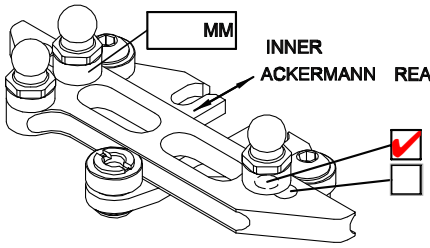

REARWARD ☐	FORWARD ☑	
AM24 OFFSET ☐		
AM24 CENTERED ☐		
ST24 ☐		

BEST LAPTIME 12.267	QUALIF. / FINAL POSITION 4 / 3
ESC SETTING	Zero Boost (Blinky mode)
COMMENTS / IMPRESSIONS	4 Steelgears in reardiff
CONTACT	