AWESOMATIX® A700 L & EX

SETUP SHEET

Alterations by Arn0 at PetitRC.com

NAME	Dominic Vogl	DATE	14.10.2012
COUNTRY		TEMP.°C AIR / TRACK	°C / °C
RACE	ETS Round 1	TRACK CONDITION	TECHNICAL ☐ CARPET ☑ MIXED ☑ ASPHALT ☐ FAST ☐
TRACK	Muelheim-Kaerlich	TRACTION	LOW ☐ MEDIUM ☐ HIGH ☑

FRONT

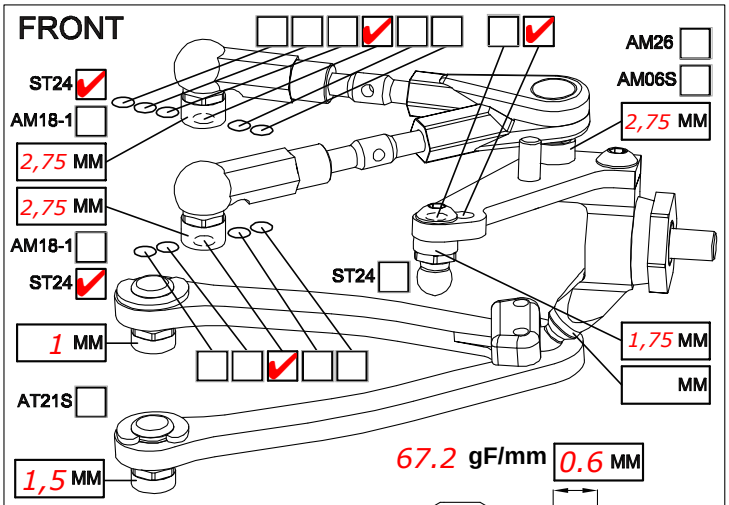

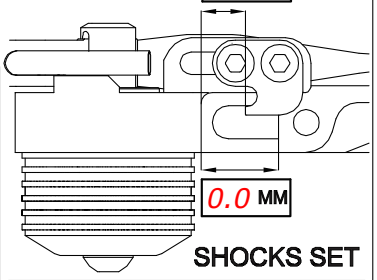

CAMBER ANGLE / °	1,5
CASTER ANGLE / °	4
TOE ANGLE / °	+1
RIDE HEIGHT / MM	5,2
DOWNSTOP / MM	6
UPSTOP / MM	
STABILIZER Ø / MM	Brown
LOW ARM	STD ☑ ☐
STEERING ARM	STD ☑ ☐
WHEEL SPACER / MM	

SHOCKS SET

SPRING	STD ☐	S ☑
DAMPER	# 6 ☑	# 3 ☐
ACTION	SYM. ☐	ASYM. ☑
SRS/RHS ARR.	I ☑	II ☐

FRONT DRIVE: BALL DIFF ☐ GEAR DIFF ☐ SPOOL ☐ ONE-WAY ☐

DIFF SET: LOOSE ☐ MEDIUM ☐ TIGHT ☐ OIL ☐ #

DOGBONE DRIVE: BUSHING ☐ C-DRIVE ☐ BB ☑ EVD ☑

REAR

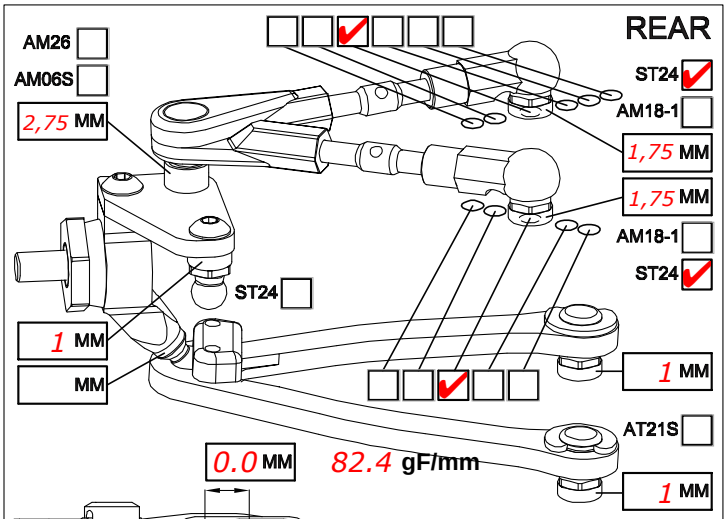

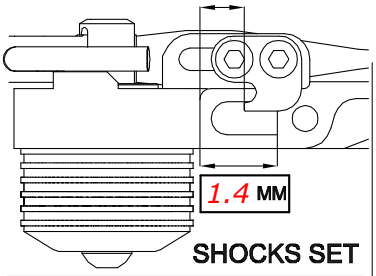

CAMBER ANGLE / °	2
CASTER ANGLE / °	5,5
TOE ANGLE / °	2,75
RIDE HEIGHT / MM	5,4
DOWNSTOP / MM	5,5
UPSTOP / MM	
STABILIZER Ø / MM	Silver
LOW ARM	STD ☑ ☐
STEERING ARM	STD ☑ ☐
WHEEL SPACER / MM	

SHOCKS SET

SPRING	STD ☐	S ☑
DAMPER	# 6 ☑	# 3 ☐
ACTION	SYM. ☐	ASYM. ☑
SRS/RHS ARR.	I ☑	II ☐

REAR DRIVE: BALL DIFF ☐ GEAR DIFF ☑

DIFF SET: LOOSE ☐ MEDIUM ☐ TIGHT ☐ OIL ☑ # 3000

DOGBONE DRIVE: BUSHING ☐ C-DRIVE ☐ BB ☑ EVD ☐

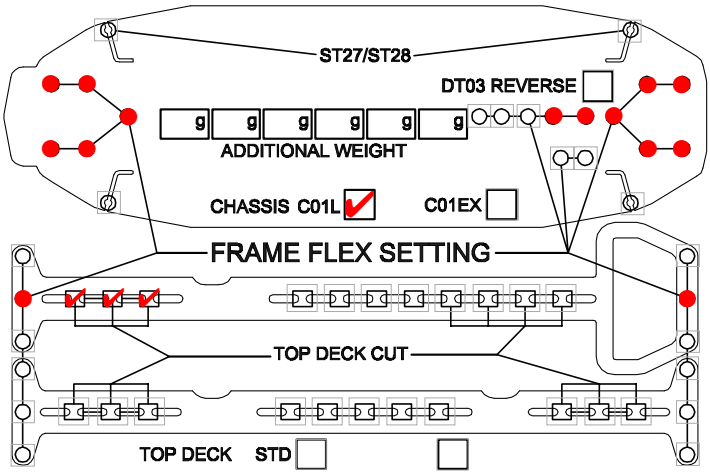

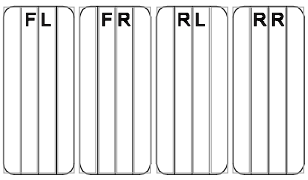

TIRES	FRONT	REAR
BRAND	RIDE	RIDE
INSERTS		
WHEELS		
ADDITIVE		

MOTOR LAYOUT	LONG. ☑	TRANS. ☐	MOTOR
SERVO LAYOUT	LEFT ☑	RIGHT ☐	SERVO
ESC LAYOUT	LEFT ☑	RIGHT ☐	ESC
BAT. LAYOUT	R1 ☐ R2 ☑	F1 ☐ F2 ☐	BATTERY
SPUR	PINION		RECEIVER
FINAL DRIVE RATIO			MOTOR OFFSET / MM
BODY			WING

STEERING POST

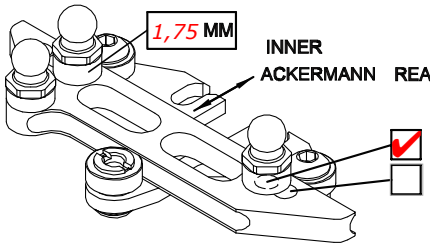

REARWARD ☐ FORWARD ☑

AM24 OFFSET ☐

AM24 CENTERED ☐

ST24 ☐

BEST LAPTIME	QUALIF. / FINAL POSITION /
ESC SETTING	
COMMENTS / IMPRESSIONS	Used 2 steel gears in the diff
CONTACT	