AWESOMATIX A700 SETUP SHEET

NAME	Viljami Kutvonen	DATE	26.02.2012
COUNTRY	Finland	TEMP.°C AIR / TRACK	/
RACE	FTT 2012 round 2		
TRACK	Oulu		

		CARPET [X]		ASPHALT [ ]
TRACK CONDITION	TECHNICAL [X]	MIXED [ ]		FAST [ ]
TRACTION	LOW [ ]	MEDIUM [X]		HIGH [ ]

FRONT

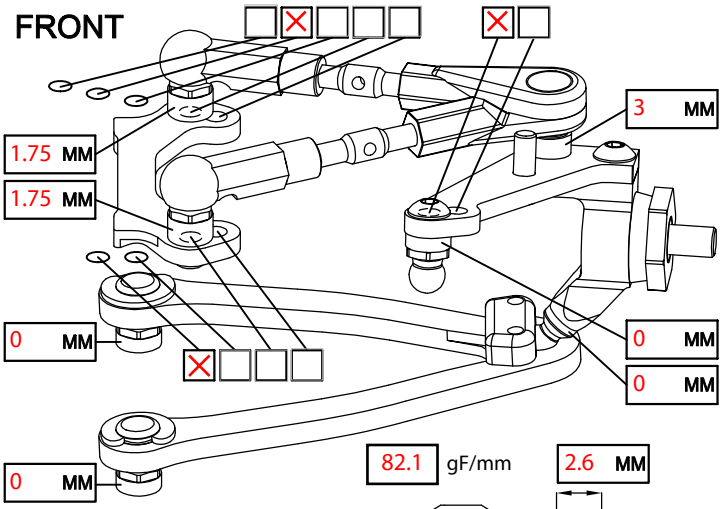

82.1 gF/mm

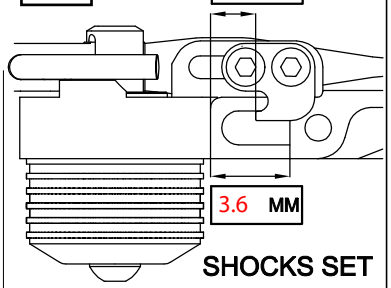

CAMBER ANGLE / °	1.5		
CASTER ANGLE / °	4		
TOE ANGLE / °	-1		
RIDE HEIGHT / MM	4.8		
DOWNSTOP / MM	6		
UPSTOP / MM			
STABILIZER Ø / MM			
LOW ARM	STD [X]		[ ]
STEERING ARM	STD [X]		[ ]
WHEEL SPACER / MM	0		

SHOCKS SET

SPRING	STD [X]		[ ]
DAMPER	STD [X]		[ ]
ACTION	SYM. [ ]		ASYM. [X]
SRS/RHS ARR.	I [ ]		II [X]

FRONT DRIVE	BALL DIFF [ ]	GEAR DIFF [ ]	SPOOL [X]	ONE-WAY [ ]
DIFF SET	LOOSE [ ]	MEDIUM [ ]	TIGHT [ ]	OIL [ ] #
DOGBONE DRIVE	BUSHING [X]	C-DRIVE [ ]	BB [ ]	EVD [ ]

REAR

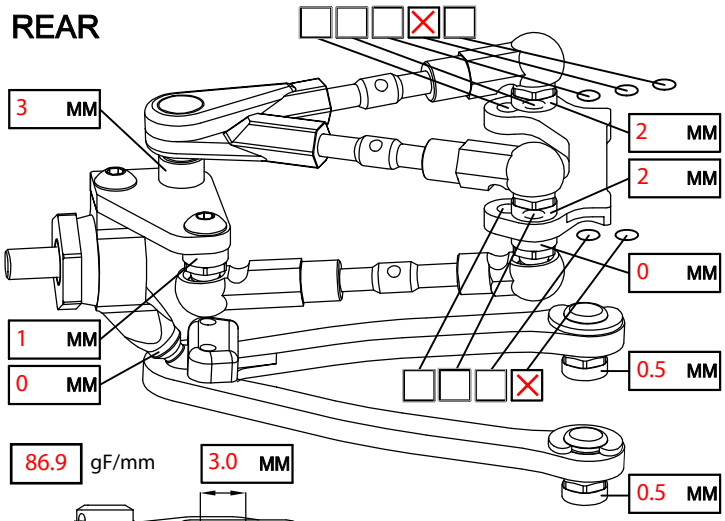

86.9 gF/mm

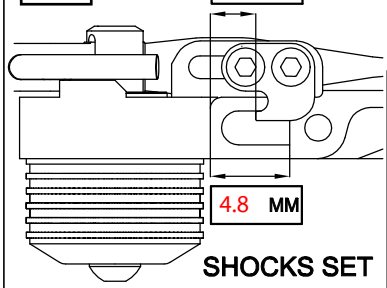

CAMBER ANGLE / °	1.5		
CASTER ANGLE / °	0		
TOE ANGLE / °	3		
RIDE HEIGHT / MM	5.0		
DOWNSTOP / MM	5		
UPSTOP / MM			
STABILIZER Ø / MM			
LOW ARM	STD [X]		[ ]
STEERING ARM	STD [X]		[ ]
WHEEL SPACER / MM	0		

SHOCKS SET

SPRING	STD [X]		[ ]
DAMPER	STD [X]		[ ]
ACTION	SYM. [ ]		ASYM. [X]
SRS/RHS ARR.	I [ ]		II [X]

REAR DRIVE	BALL DIFF [ ]		GEAR DIFF [X]	
DIFF SET	LOOSE [ ]	MEDIUM [ ]	TIGHT [ ]	OIL [X] # MR33 A
DOGBONE DRIVE	BUSHING [ ]	C-DRIVE [X]	BB [ ]	EVD [ ]

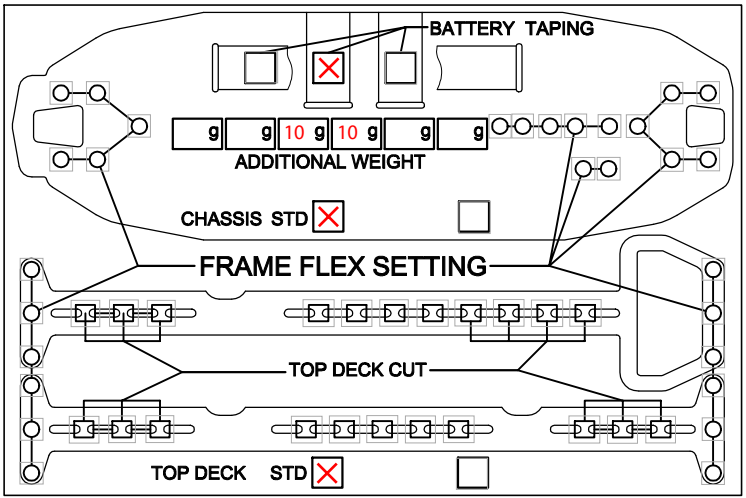

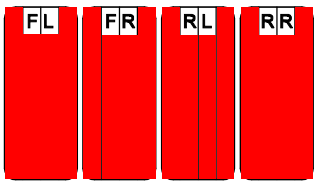

TIRES	FRONT	REAR
BRAND	Sorex 28 pregl	Sorex 28 pregl
INSERTS		
WHEELS		
ADDITIVE	CS High Grip	CS High Grip

MOTOR LAYOUT	LONG. [X]	TRANS. [ ]		
SERVO LAYOUT	LEFT [X]	RIGHT [ ]		
ESC LAYOUT	LEFT [X]	RIGHT [ ]		
BAT. LAYOUT	R1 [X]	R2 [ ]	F1 [ ]	F2 [ ]
SPUR	22	PINION	98	
FINAL DRIVE RATIO				
BODY	PF Mazdaspeed 6 LW			

MOTOR	LRP X20 4.5T
SERVO	Sanwa SDX-801
ESC	LRP SXX TCspec V2
BATTERY	LRP 6200 "Big Mama"
RECEIVER	Sanwa 451
MOTOR OFFSET / MM	
WING	

STEERING POST

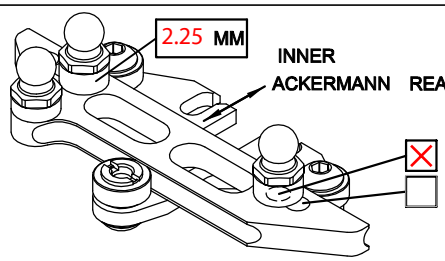

INNER ACKERMANN REARWARD [ ] FORWARD [X]

Reset all

BEST LAPTIME		QUALIF. / FINAL POSITION	1 / 1
ESC SETTING	0-2-2-1		
COMMENTS / IMPRESSIONS			
CONTACT			