AWESOMATIX A700 SETUP SHEET

NAME	Ivan Laptev	DATE	30.10.11
COUNTRY	Germany, Koblenz	TEMP.°C AIR / TRACK	/
RACE	ETS 2011 round 1		
TRACK	Muelheim-Kaerlich		

		CARPET [X]	ASPHALT [ ]
TRACK CONDITION	TECHNICAL [X]	MIXED [ ]	FAST [ ]
TRACTION	LOW [ ]	MEDIUM [X]	HIGH [ ]

FRONT

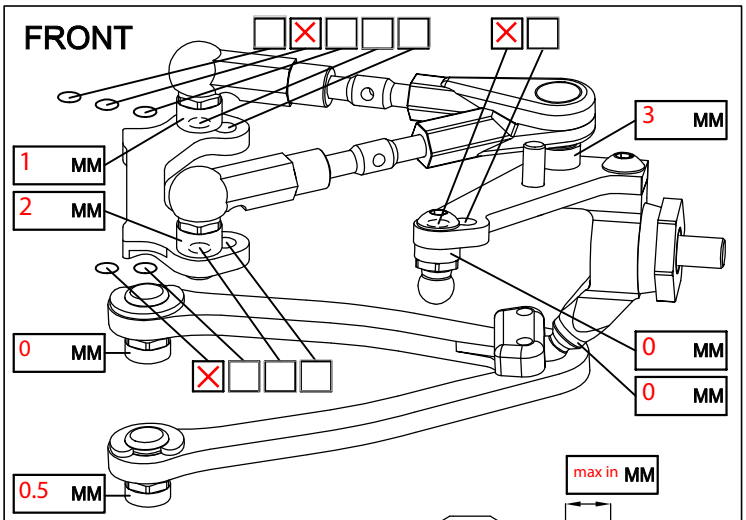

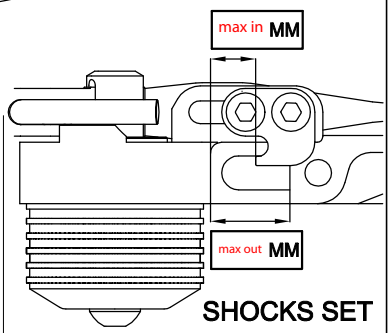

CAMBER ANGLE / °	2
CASTER ANGLE / °	4
TOE ANGLE / °	2
RIDE HEIGHT / MM	5
DOWNSTOP / MM	6
UPSTOP / MM	
STABILIZER Ø / MM	
LOW ARM	STD [X] [ ]
STEERING ARM	STD [X] [ ]
WHEEL SPACER / MM	0.5

SHOCKS SET

SPRING	STD [X]	[ ]
DAMPER	STD [X]	[ ]
ACTION	SYM. [ ]	ASYM. [X]
SRS/RHS ARR.	I [ ]	II [X]

FRONT DRIVE: BALL DIFF [ ] GEAR DIFF [ ] SPOOL [X] ONE-WAY [ ]

DIFF SET: LOOSE [ ] MEDIUM [ ] TIGHT [ ] OIL [ ] #

DOGBONE DRIVE: BUSHING [ ] C-DRIVE [ ] BB [ ] EVD [X]

REAR

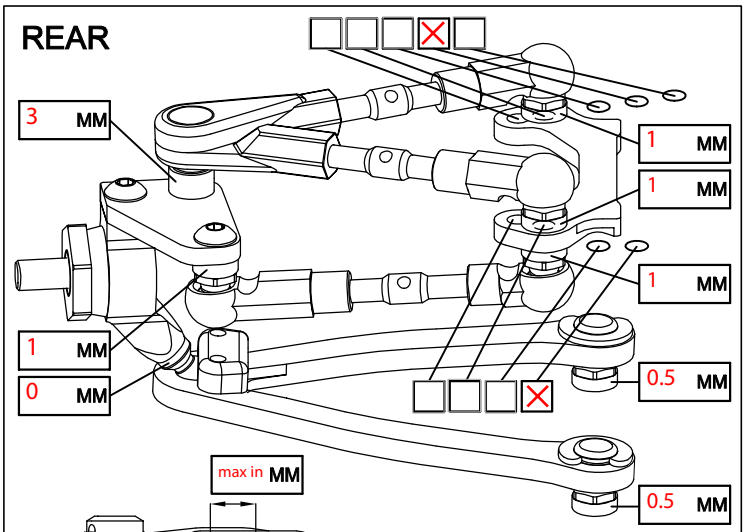

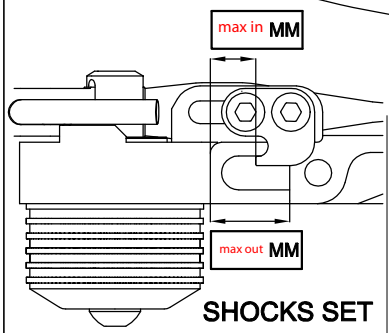

CAMBER ANGLE / °	2
CASTER ANGLE / °	6 (3 mm difference)
TOE ANGLE / °	3
RIDE HEIGHT / MM	5
DOWNSTOP / MM	5
UPSTOP / MM	
STABILIZER Ø / MM	
LOW ARM	STD [X] [ ]
STEERING ARM	STD [X] [ ]
WHEEL SPACER / MM	1

SHOCKS SET

SPRING	STD [X]	[ ]
DAMPER	STD [X]	[ ]
ACTION	SYM. [ ]	ASYM. [X]
SRS/RHS ARR.	I [ ]	II [X]

REAR DRIVE: BALL DIFF [ ] GEAR DIFF [X]

DIFF SET: LOOSE [ ] MEDIUM [ ] TIGHT [ ] OIL [X] # B

DOGBONE DRIVE: BUSHING [ ] C-DRIVE [X] BB [ ] EVD [ ]

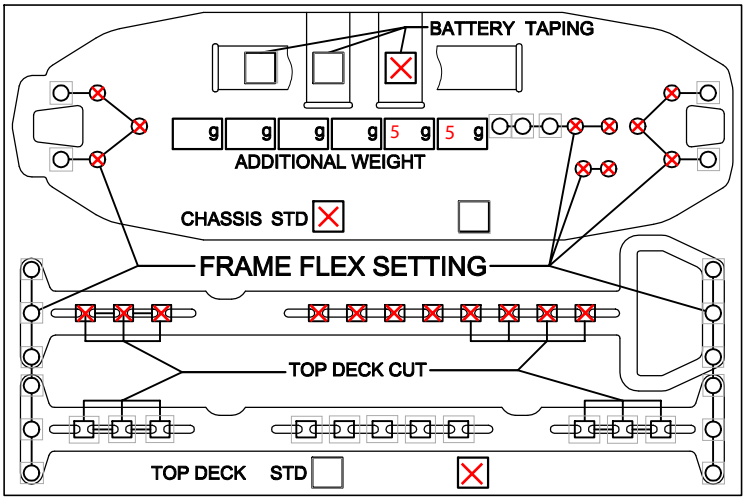

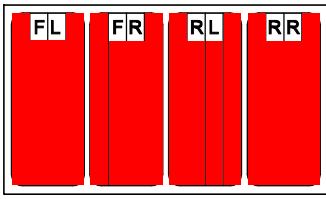

TIRES	FRONT	REAR
BRAND	ride 28	ride 28
INSERTS	std	std
WHEELS	ride	ride
ADDITIVE	cs hg	cs hg

MOTOR LAYOUT	LONG. [X]	TRANS. [ ]	MOTOR	sp mmm 4.5
SERVO LAYOUT	LEFT [X]	RIGHT [ ]	SERVO	sanwa sdx-801
ESC LAYOUT	LEFT [X]	RIGHT [ ]	ESC	sp 2.0 gt pro
BAT. LAYOUT	R1 [ ] R2 [X]	F1 [ ] F2 [ ]	BATTERY	speedpower
SPUR	96	PINION 23	RECEIVER	sanwa
FINAL DRIVE RATIO			MOTOR OFFSET / MM	
BODY	speed 6		WING	toni

STEERING POST

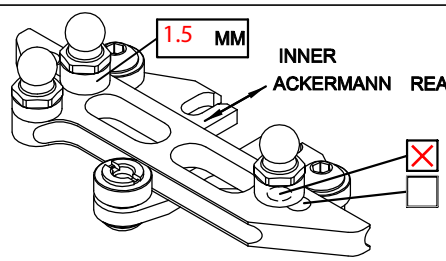

INNER ACKERMANN REARWARD [ ] FORWARD [X]

Reset all

BEST LAPTIME QUALIF. / FINAL POSITION 18 / 14

ESC SETTING old software, 5 punsh, 10% auto brake

COMMENTS / IMPRESSIONS droop measured from the bottom of the arm

CONTACT rc_cars@mail333.com