AWESOMATIX A800MMX

SETUP SHEET

NAME	Marc Rheinard	DATE 25.09.2022	TEMP. °C AIR / TRACK /
COUNTRY	Germany		
RACE	ETS RD4		
TRACK	Luxembourg		

	ASPHALT ☑	OUTDOOR ☑	INDOOR ☐	CARPET ☐
TRACK CONDITION	TECHNICAL ☐		MIXED ☐	FAST ☑
TRACTION	LOW ☐		MEDIUM ☑	HIGH ☐

FRONT

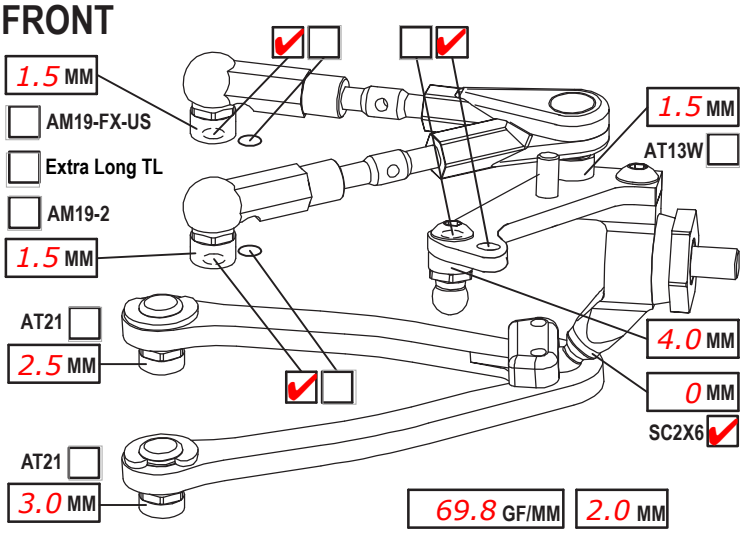

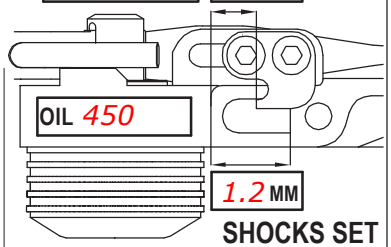

SHOCKS SET

CAMBER ANGLE / °	1.2		
CASTER ANGLE / °	4.5		
TOE ANGLE / °	1		
RIDE HEIGHT / MM	5.2		
DOWNSTOP / MM	5.4		
UPWNSTOP / MM			
STABILIZER Ø / MM	1.1		
LOW ARM C04M1+9.0	☑		☐
STEER. ARM AM14LS	☑		☐
WHEEL SPACER / MM			
FRONT DRIVE	SPOOL ☑	GB2B ☐	
DIFF. OIL	DIFF WASHERS		

ROTOR	STD ☑		☐
SPRING	STD ☑	S	☐
DAMPER	D2.2 ☑		☐
SRS/RHS ARR.	I ☐	II	☑
PSS SETUP	25% ☑	15%	☐
	LOW ☐	HIGH	☑
WHEELHUB	AM06WL ☑		☐

REAR

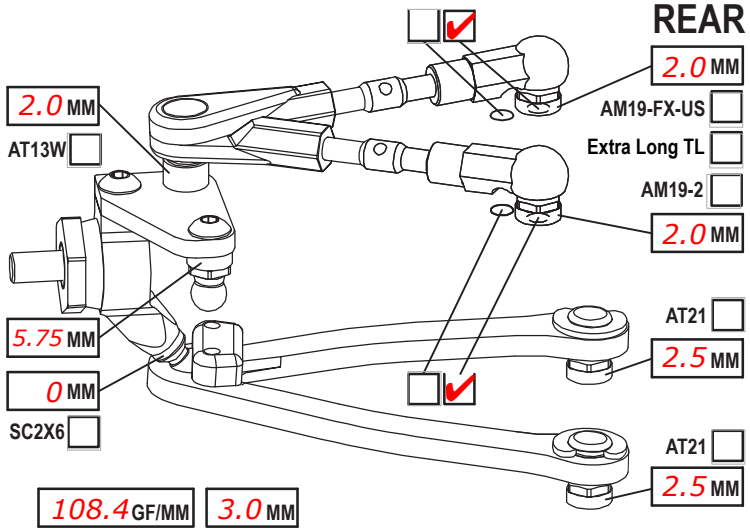

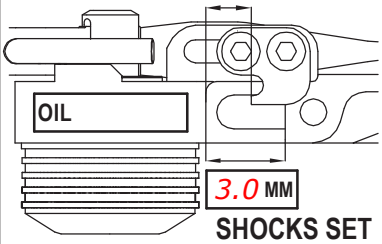

SHOCKS SET

CAMBER ANGLE / °	1.2		
CASTER ANGLE / °	-3		
TOE ANGLE / °	2.5		
RIDE HEIGHT / MM	5.6		
DOWNSTOP / MM	4.6		
UPWNSTOP / MM			
STABILIZER Ø / MM	1.1		
LOW ARM C04M1+8.0	☑		☐
STEER. ARM AM23-1	☐	AM14LS	☑
WHEEL SPACER / MM			
REAR DRIVE	GB2B ☑		
DIFF. OIL MR33 7k	DIFF WASHERS small shim 0.4		

ROTOR	STD ☑		☐
SPRING	STD ☑	S	☐
DAMPER	D2.2 ☑		☐
SRS/RHS ARR.	I ☑	II	☐
PSS SETUP	25% ☐	15%	☐
	LOW ☐	HIGH	☑
WHEELHUB	AM06WL ☑		☐

CHASSIS FLEX AND WEIGHT SETTINGS

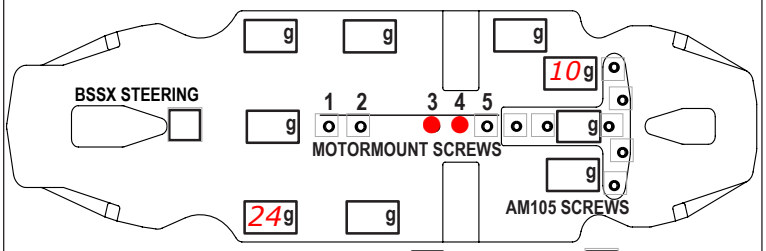

LOWER DECK C01B-X-MM2 ☑ C01B-X-MMA ☐

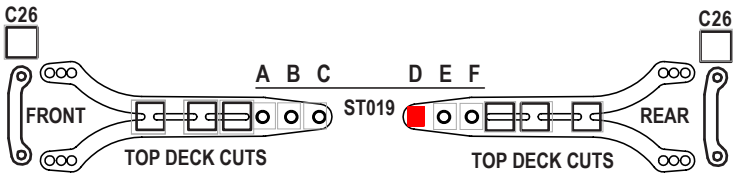

FRONT TOP DECK C127 ☐ C127S ☐ REAR TOP DECK C127 ☐ C127S ☐

TIRES	Matrix		
INSERTS			
WHEELS			
ADDITIVE	MR33 V3	TIME - FR 15min	RR 15min
TOTAL WEIGHT 1310	WEIGHT DISTRIBUTION F %	R %	
NOTES:			

MOTOR LATERAL SHIFT / MM	ACKERMANN POSITION forward
MOTOR Orca Modtreme4.5T	SERVO PowerHD S15
SPUR 112 PINION 29 RATIO 7.34	STEER TRAVEL IN 26 OUT
BODY Xtreme Twister L	BATTERY Orca 6390
WING Xtreme speciale L	RECEIVER Sanwa 492
ESC Orca OE1	RADIO Sanwa M17
ESC SETTING	
BEST LAPTIME 16.9	QUALIF./FINAL POSITION 2 / 2

C27MMX Topdeck
BDL
MR33 oil used