AWESOMATIX A800MMX

SETUP SHEET

NAME	Michele Manzo	DATE	18-21.08.22
COUNTRY	DE	TEMP. °C AIR / TRACK	/
RACE	ETS rd 3		
TRACK	Andernach		

TRACK CONDITION	ASPHALT ✔	OUTDOOR ✔	INDOOR ☐	CARPET ☐
	TECHNICAL ✔		MIXED ☐	FAST ☐
TRACTION	LOW ✔		MEDIUM ✔	HIGH ☐

FRONT

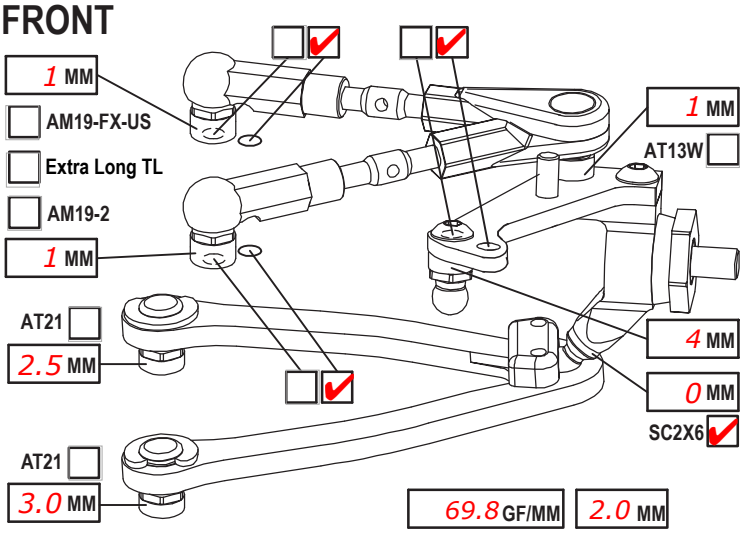

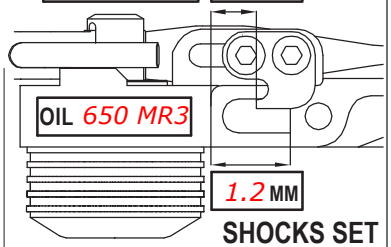

SHOCKS SET

CAMBER ANGLE / °	2.0	ROTOR	STD ✔ ☐
CASTER ANGLE / °	4.5	SPRING	STD ✔ S ☐
TOE ANGLE / °	0.7	DAMPER	D2.2 ✔ ☐
RIDE HEIGHT / MM	5.1	SRS/RHS ARR.	I ☐ II ✔
DOWNSTOP / MM	5.2	PSS SETUP	25% ✔ 15% ☐
UPWNSTOP / MM	-		
STABILIZER Ø / MM	1.1		
LOW ARM	C04M1+9.0 ✔ ☐		
STEER. ARM	AM14LS ✔ ☐		
WHEEL SPACER / MM	0		
FRONT DRIVE	SPOOL ✔ GB2B ☐	LOW ☐	HIGH ✔
DIFF. OIL	-	DIFF WASHERS	-
		WHEELHUB	AM06WL ✔ ☐

REAR

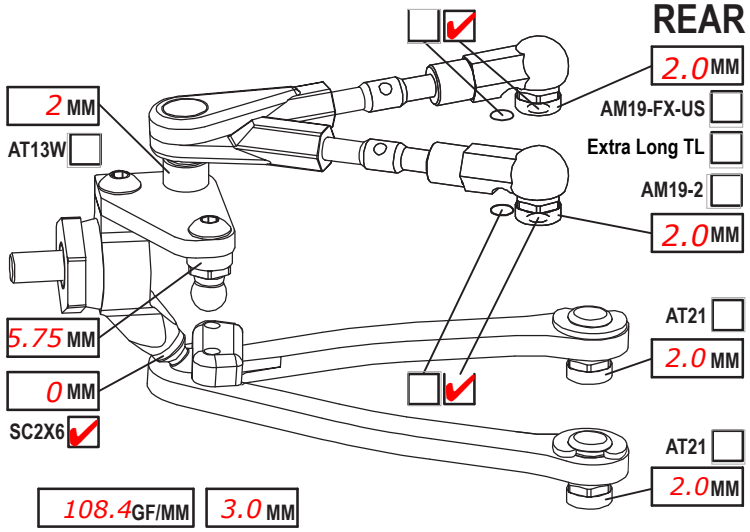

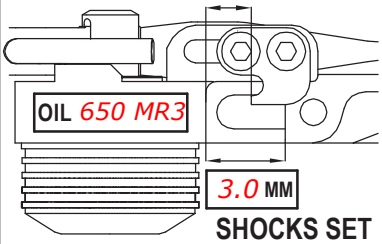

SHOCKS SET

CAMBER ANGLE / °	1.5	ROTOR	STD ✔ ☐
CASTER ANGLE / °	-3	SPRING	STD ✔ S ☐
TOE ANGLE / °	2.2	DAMPER	D2.2 ✔ ☐
RIDE HEIGHT / MM	5.5	SRS/RHS ARR.	I ✔ II ☐
DOWNSTOP / MM	4.4	PSS SETUP	25% ☐ 15% ☐
UPWNSTOP / MM	-		
STABILIZER Ø / MM	1.1		
LOW ARM	C04M1+8.0 ✔ ☐		
STEER. ARM	AM23-1 ☐ AM14LS ✔		
WHEEL SPACER / MM			
REAR DRIVE	GB2B ✔	LOW ☐	HIGH ✔
DIFF. OIL	8k MR33	DIFF WASHERS	small shims
		WHEELHUB	AM06WL ✔ ☐

CHASSIS FLEX AND WEIGHT SETTINGS

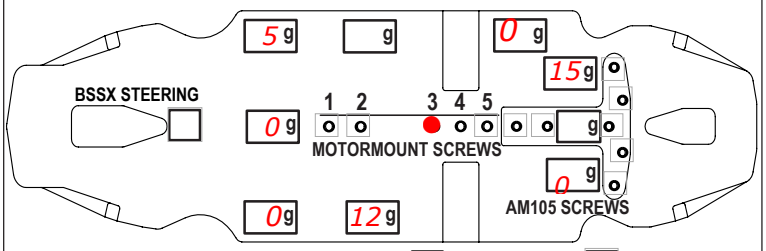

LOWER DECK C01B-X-MM2 ✔ C01B-X-MMA ☐

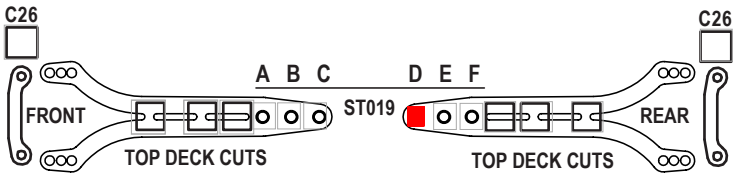

FRONT TOP DECK C127 ☐ C127S ☐ REAR TOP DECK C127 ☐ C127S ☐

TIRES	Matrix ETS		
INSERTS			
WHEELS			
ADDITIVE	MR33 V3	TIME - FR	10min RR 10min
TOTAL WEIGHT	1305	WEIGHT DISTRIBUTION	F 48.2 % R 51.8 %
NOTES:	65° heating		

MOTOR LATERAL SHIFT / MM	0	ACKERMANN POSITION	Full forward
MOTOR	HW G3 5.0T/ 35°	SERVO	MKS HBL575SL
SPUR	114 PINION 29 RATIO 7.47	STEER TRAVEL IN	25 OUT
BODY	Wolverine 0.5 (58mm)	BATTERY	Sunpadow 5500 ulcg
WING	3° xtreme	RECEIVER	
ESC	HW XR10Pro G2S	RADIO	
ESC SETTING			
BEST LAPTIME	18.021	QUALIF./FINAL POSITION	/

BDL 13.5mm, 3. hole 1.75 Manzo46 height adjustment o ring
C27MMX
AT15
BW10,BW8, BW7
ADC