AWESOMATIX A800MMX

SETUP SHEET

NAME	Alex Kunkler	DATE	
COUNTRY	Austria	TEMP. °C AIR / TRACK	/
RACE	ETS Rd2 2022/2023	TRACK CONDITION	ASPHALT ☑ OUTDOOR ☑ INDOOR ☐ CARPET ☐ / TECHNICAL ☐ MIXED ☐ FAST ☑
TRACK	Aigen	TRACTION	LOW ☐ MEDIUM ☑ HIGH ☐

FRONT

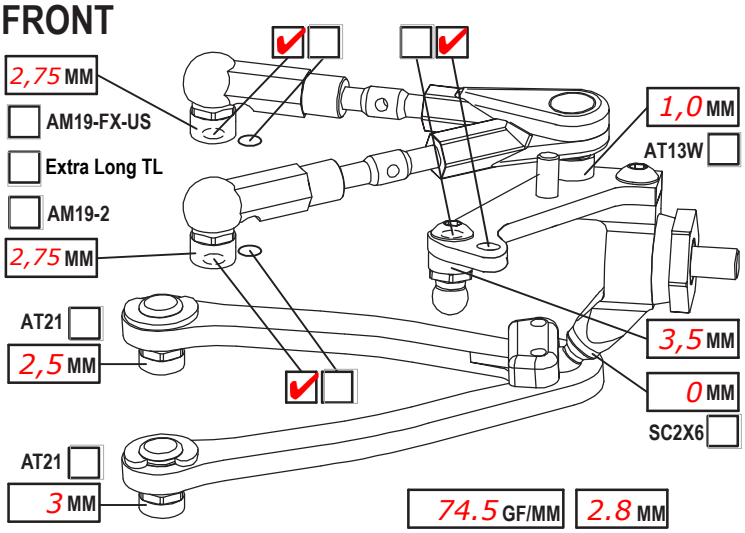

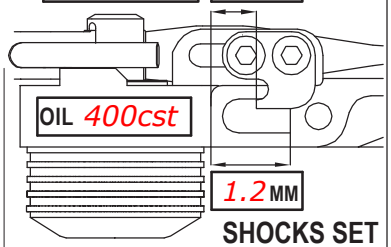

CAMBER ANGLE / °	1,8	SHOCKS SET	
CASTER ANGLE / °	4		
TOE ANGLE / °	1 per side		
RIDE HEIGHT / MM	5,2		
DOWNSTOP / MM	5,6		
UPWNSTOP / MM	-	ROTOR	STD ☑
STABILIZER Ø / MM	1,0	SPRING	STD ☐ S ☑
LOW ARM C04M1+9.0	☑ ☐	DAMPER	D2.2 ☑
STEER. ARM AM14LS	☑ ☐	SRS/RHS ARR.	I ☑ II ☐
WHEEL SPACER / MM	-	PSS SETUP	25% ☐ 15% ☐
FRONT DRIVE	SPOOL ☑ GB2B ☐		LOW ☐ HIGH ☑
DIFF. OIL	DIFF WASHERS		
		WHEELHUB	AM06WL ☑ ☐

REAR

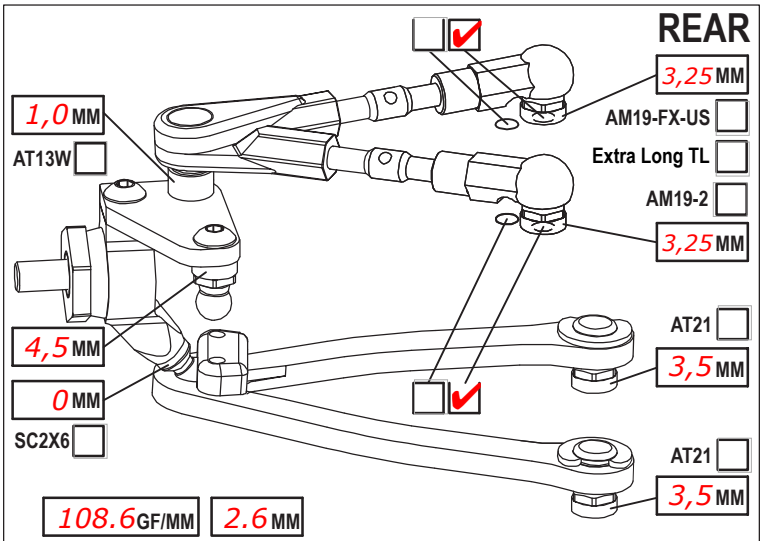

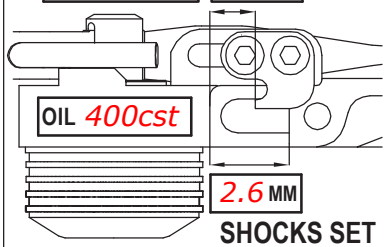

CAMBER ANGLE / °	1,8	SHOCKS SET	
CASTER ANGLE / °	-4 short		
TOE ANGLE / °	2,5		
RIDE HEIGHT / MM	5,4		
DOWNSTOP / MM	4,4		
UPWNSTOP / MM	-	ROTOR	STD ☑
STABILIZER Ø / MM	1,1	SPRING	STD ☑ S ☐
LOW ARM C04M1+8.0	☑ ☐	DAMPER	D2.2 ☑
STEER. ARM AM23-1	☑ ☐	SRS/RHS ARR.	I ☑ II ☐
WHEEL SPACER / MM	-	PSS SETUP	25% ☐ 15% ☐
REAR DRIVE	GB2B ☑		LOW ☐ HIGH ☑
DIFF. OIL 10000	DIFF WASHERS SH5x7x0.4		
		WHEELHUB	AM06WL ☑ ☐

CHASSIS FLEX AND WEIGHT SETTINGS

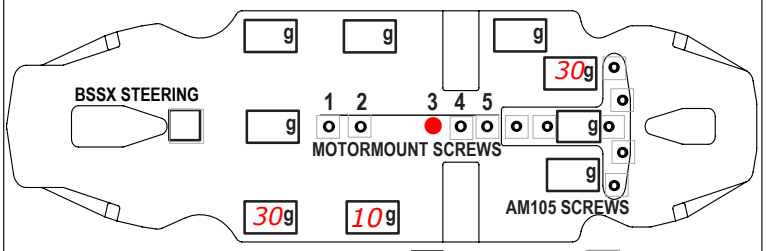

LOWER DECK C01B-X-MM2 ☑ C01B-X-MMA ☐

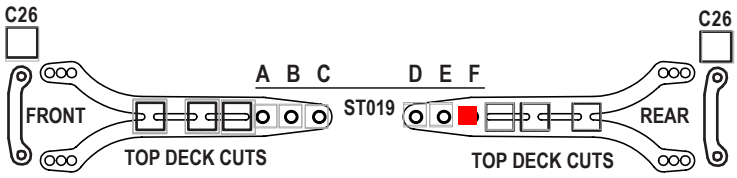

FRONT TOP DECK C127 ☐ C127S ☐ REAR TOP DECK C127 ☐ C127S ☐

TIRES	MATRIX ETS		
INSERTS	-		
WHEELS	-		
ADDITIVE	MR33	TIME - FR 15	RR 15
TOTAL WEIGHT	1325	WEIGHT DISTRIBUTION F %	R %
NOTES:			

MOTOR LATERAL SHIFT / MM	1,75	ACKERMANN POSITION	Rear
MOTOR	ETS 13,5T	SERVO	
SPUR 102 PINION 43 RATIO	4.51	STEER TRAVEL IN 26	OUT -
BODY	Wolverine Max	BATTERY	Ruddog Racing 8200mAh
WING	std	RECEIVER	
ESC	ETS 13,5T	RADIO	
ESC SETTING			
BEST LAPTIME		QUALIF./FINAL POSITION	6 / 5

Option parts: HRB / AT15 (F+R) / C07A / AM24-20 / BDL (in front) / C27MMX
- MXLR Servo Horn at 17,5mm height