AWESOMATIX A800MMX

SETUP SHEET

NAME	Dimitris Ioannidis	DATE 29/05/22	TEMP. °C AIR / TRACK 29-31 / 47-55
COUNTRY	Greece	TRACK CONDITION	ASPHALT ☑ OUTDOOR ☑ INDOOR ☐ CARPET ☐
RACE	Greek Nationals 2022, Round 1		TECHNICAL ☑ MIXED ☐ FAST ☐
TRACK	RcManiacs, Argos	TRACTION	LOW ☐ MEDIUM ☑ HIGH ☐

FRONT

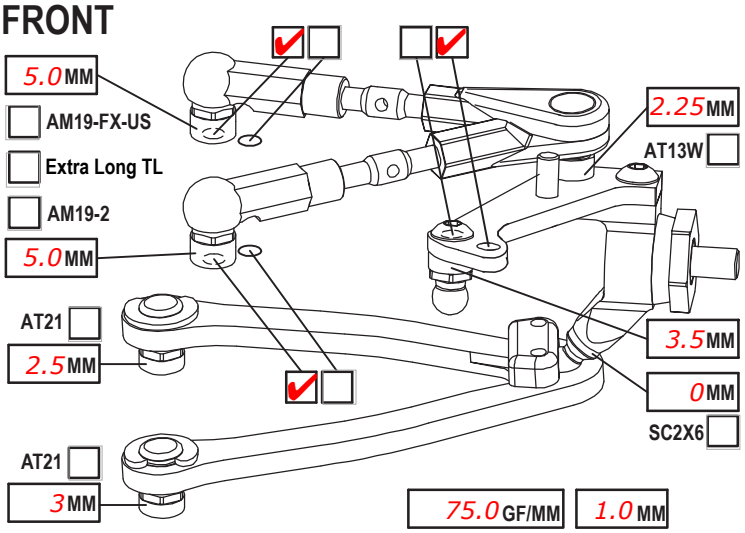

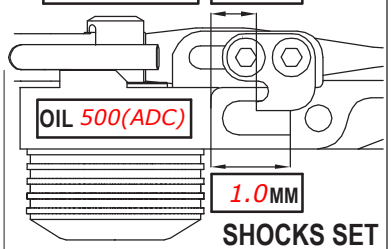

CAMBER ANGLE / °	1
CASTER ANGLE / °	4
TOE ANGLE / °	1
RIDE HEIGHT / MM	5.2
DOWNSTOP / MM	6
UPWNSTOP / MM	-
STABILIZER Ø / MM	1.0
LOW ARM C04M1+9.0	☑ ☐
STEER. ARM AM14LS	☑ ☐
WHEEL SPACER / MM	-
FRONT DRIVE	SPOOL ☑ GB2B ☐
DIFF. OIL	DIFF WASHERS

SHOCKS SET

ROTOR	STD ☑	☐
SPRING	STD ☑	S ☐
DAMPER	D2.2 ☑	☐
SRS/RHS ARR.	I ☐	II ☑
PSS SETUP	25% ☑	15% ☐
	LOW ☐	HIGH ☑
WHEELHUB	AM06WL ☑	☐

REAR

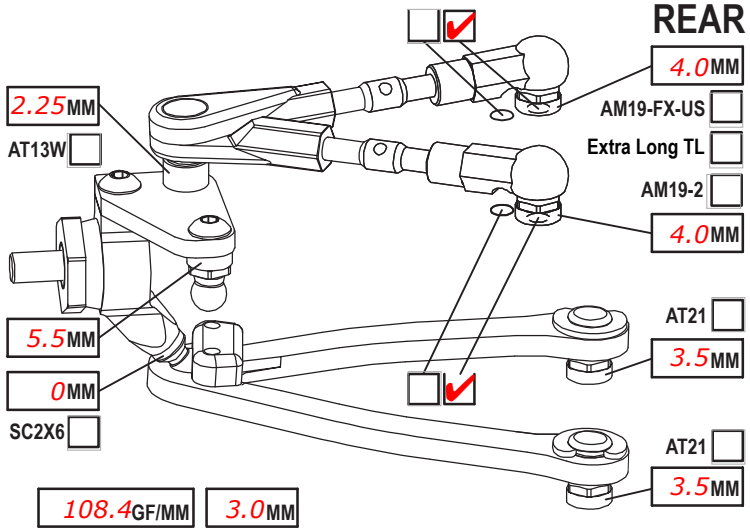

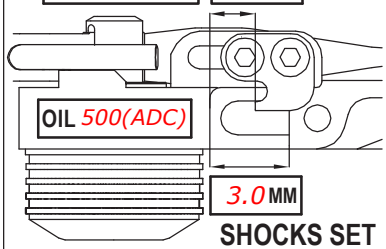

CAMBER ANGLE / °	1
CASTER ANGLE / °	-2(short)
TOE ANGLE / °	3
RIDE HEIGHT / MM	5.4
DOWNSTOP / MM	5
UPWNSTOP / MM	-
STABILIZER Ø / MM	1.1
LOW ARM C04M1+8.0	☑ ☐
STEER. ARM AM23-1	☐ AM14LS ☑
WHEEL SPACER / MM	-
REAR DRIVE	GB2B ☑ LOW ☐ HIGH ☑
DIFF. OIL 5K	DIFF WASHERS Small Shims

SHOCKS SET

ROTOR	STD ☑	☐
SPRING	STD ☑	S ☐
DAMPER	D2.2 ☑	☐
SRS/RHS ARR.	I ☑	II ☐
PSS SETUP	25% ☐	15% ☐
WHEELHUB	AM06WL ☑	☐

CHASSIS FLEX AND WEIGHT SETTINGS

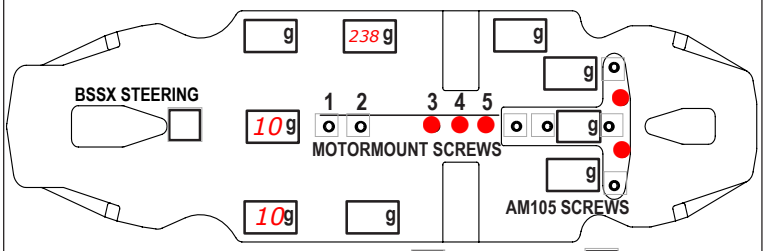

LOWER DECK C01B-X-MM2 ☐ C01B-X-MMA ☐

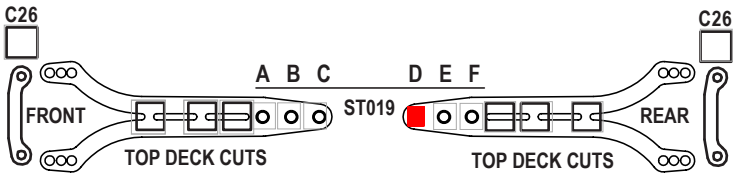

FRONT TOP DECK C127 ☐ C127S ☐ REAR TOP DECK C127 ☐ C127S ☐

TIRES	TPro
INSERTS	-
WHEELS	-
ADDITIVE	Rc Doctors Red
TOTAL WEIGHT	1332
WEIGHT DISTRIBUTION	F 49 % R 51 %
TIME - FR	15
RR	15
NOTES:	

MOTOR LATERAL SHIFT / MM 1	ACKERMANN POSITION maximum backwards
MOTOR HW V10 5.0T G3	SERVO MKS X5
SPUR 110 PINION 26 RATIO 8.04	STEER TRAVEL IN 20 OUT 14
BODY Twister Specialle 0.5mm	BATTERY IP 5900
WING Twister Specialle 0.5mm	RECEIVER Sanwa 482
ESC HW XR10 G2s	RADIO Sanwa M12-RS
ESC SETTING	
BEST LAPTIME 11.447	QUALIF./FINAL POSITION 1 / 1

Optional parts: C01MMX, AT15, AT22M, T-Brace, BW22, central weight BW7 BW8, low friction belts ,aluminum screws, AM111 belt anti skip, AT139, C07, AT144,C27MMX top deck, AM14LS rear, narrow LFA pulleys front and rear, HRB horizontal posts.