AWESOMATIX A800MMX

SETUP SHEET

NAME	Gonzalo Cortes	DATE	07-17to18/2021
COUNTRY	USA	TEMP. °C AIR / TRACK	85F /
RACE	Belt Race	TRACK CONDITION	ASPHALT ✔ OUTDOOR ☐ INDOOR ☐ CARPET ☐
TRACK	Norcal Hobbies		TECHNICAL ☐ MIXED ✔ FAST ☐
		TRACTION	LOW ✔ MEDIUM ✔ HIGH ☐

FRONT

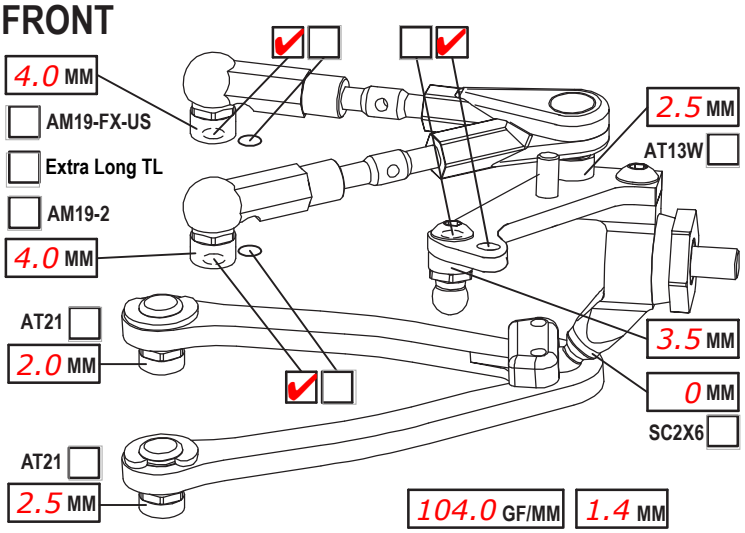

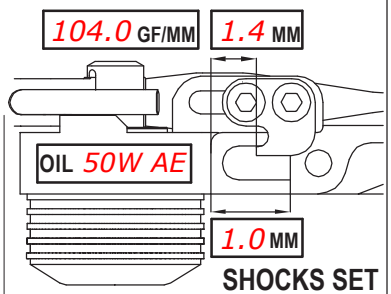

CAMBER ANGLE / °	-2		
CASTER ANGLE / °	4.0		
TOE ANGLE / °	+1		
RIDE HEIGHT / MM	5.2		
DOWNSTOP / MM	5.6		
UPWNSTOP / MM			
STABILIZER Ø / MM	1.0		
LOW ARM C04M1+9.0	✔ ☐		
STEER. ARM AM14LS	✔ ☐		
WHEEL SPACER / MM			
FRONT DRIVE	SPOOL ✔ GB2B ☐		
DIFF. OIL		DIFF WASHERS	

SHOCKS SET

ROTOR	STD ✔	☐
SPRING	STD ✔	S ☐
DAMPER	D2.2 ✔	☐
SRS/RHS ARR.	I ✔	II ☐
PSS SETUP	25% ☐	15% ☐
	LOW ☐	HIGH ✔
WHEELHUB	AM06WL ✔	☐

REAR

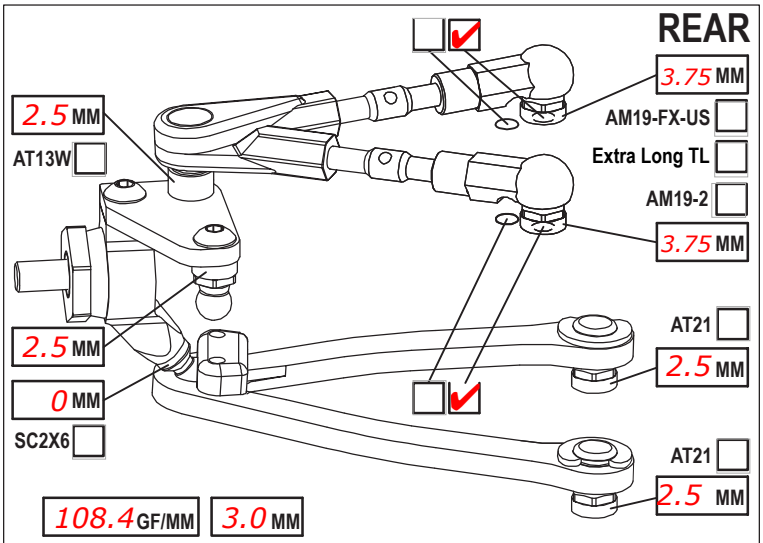

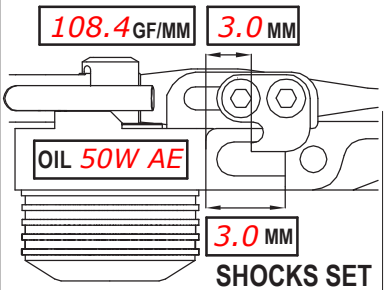

CAMBER ANGLE / °	-2		
CASTER ANGLE / °	-4		
TOE ANGLE / °	2.5		
RIDE HEIGHT / MM	5.4		
DOWNSTOP / MM	4.6		
UPWNSTOP / MM			
STABILIZER Ø / MM	1.1		
LOW ARM C04M1+8.0	✔ ☐		
STEER. ARM AM23-1	✔ ☐		
WHEEL SPACER / MM			
REAR DRIVE	GB2B ☐		
DIFF. OIL 7k		DIFF WASHERS Stock	

SHOCKS SET

ROTOR	STD ✔	☐
SPRING	STD ✔	S ☐
DAMPER	D2.2 ✔	☐
SRS/RHS ARR.	I ✔	II ☐
PSS SETUP	25% ☐	15% ☐
	LOW ☐	HIGH ✔
WHEELHUB	AM06WL ✔	☐

CHASSIS FLEX AND WEIGHT SETTINGS

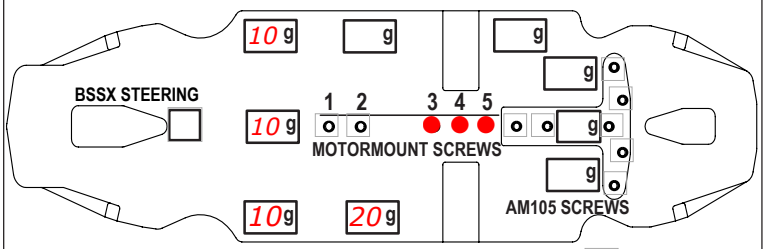

LOWER DECK C01B-X-MM2 ✔ C01B-X-MMA ☐

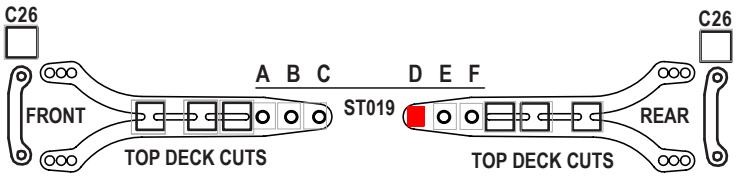

FRONT TOP DECK C127 ☐ C127S ☐ REAR TOP DECK C127 ☐ C127S ☐

TIRES	Team powers 34
INSERTS	
WHEELS	
ADDITIVE	MG black
TIME - FR	10min RR 10min
TOTAL WEIGHT	1340g
WEIGHT DISTRIBUTION	F 50 % R 50 %
NOTES:	

MOTOR LATERAL SHIFT / MM		ACKERMANN POSITION	Forward
MOTOR	Reedy 4.5t	SERVO	Reedy
SPUR	PINION 1 RATIO 0.00	STEER TRAVEL	IN OUT
BODY	Twister Speciale	BATTERY	Reedy 6000mah zappers
WING	0.7	RECEIVER	Sanwa
ESC	Reedy 510R blackbox	RADIO	M17
ESC SETTING			
BEST LAPTIME		QUALIF./FINAL POSITION	/

A700-AT15 bearing spacers
A800-ADC shock caps
A800-BDL
A800-BW10
A800-BW7
A800-C27MMX one peace top deck
A800-HRB. Horizontal Rear Bodypost