AWESOMATIX A800MMX

SETUP SHEET

NAME: Olivier Bultynck
COUNTRY: Germany
RACE: ETS R1
TRACK: Arena33

DATE: 15-18/07 TEMP. °C AIR / TRACK /

TRACK CONDITION: ASPHALT ☑ OUTDOOR ☑ INDOOR ☐ CARPET ☐
TECHNICAL ☑ MIXED ☑ FAST ☐
TRACTION: LOW ☐ MEDIUM ☑ HIGH ☑

FRONT

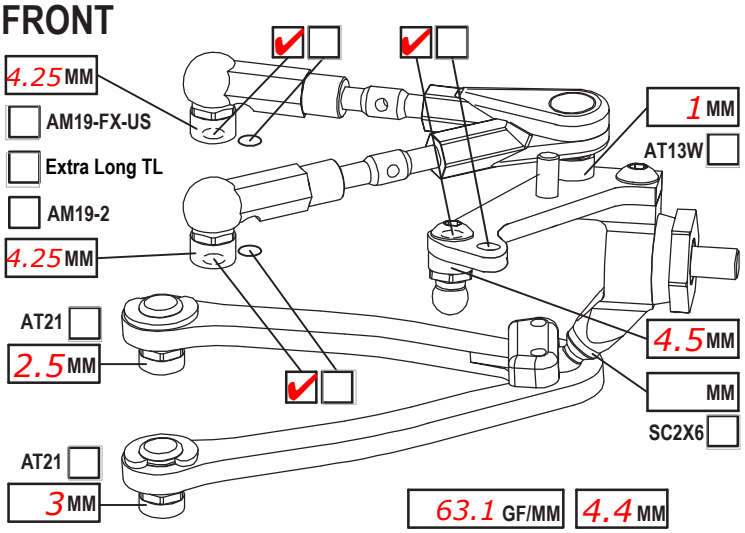

63.1 GF/MM | 4.4 MM

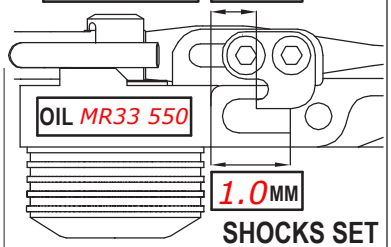

SHOCKS SET

CAMBER ANGLE / °	2.25
CASTER ANGLE / °	-3
TOE ANGLE / °	1 each side
RIDE HEIGHT / MM	5.4
DOWNSTOP / MM	4.6
UPWNSTOP / MM	
STABILIZER Ø / MM	1.1
LOW ARM C04M1+9.0	☑ ☐
STEER. ARM AM14LS	☑ ☐
WHEEL SPACER / MM	
FRONT DRIVE SPOOL	☑ GB2B ☐
DIFF. OIL	DIFF WASHERS

ROTOR	STD ☑	☐
SPRING	STD ☐	S ☑
DAMPER	D2.2 ☐	☐
SRS/RHS ARR.	I ☑	II ☐
PSS SETUP	25% ☑	15% ☐
	LOW ☐	HIGH ☑
WHEELHUB	AM06WL ☐	☐

REAR

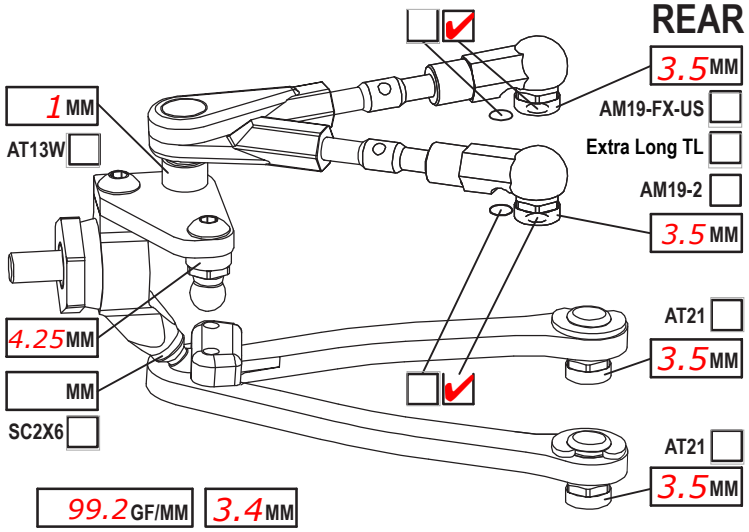

99.2 GF/MM | 3.4 MM

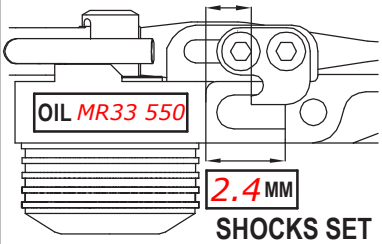

SHOCKS SET

CAMBER ANGLE / °	2.25
CASTER ANGLE / °	-4
TOE ANGLE / °	2.3
RIDE HEIGHT / MM	5.8
DOWNSTOP / MM	4.4
UPWNSTOP / MM	
STABILIZER Ø / MM	1.0
LOW ARM C04M1+8.0	☑ ☐
STEER. ARM AM23-1	☐ AM14LS ☑
WHEEL SPACER / MM	
REAR DRIVE	GB2B ☑ LOW ☐ HIGH ☑
DIFF. OIL MR33 7K	DIFF WASHERS SH5x7x0.4

ROTOR	STD ☑	☐
SPRING	STD ☑	S ☐
DAMPER	D2.2 ☐	☐
SRS/RHS ARR.	I ☑	II ☐
PSS SETUP	25% ☐	15% ☐
WHEELHUB	AM06WL ☐	☐

CHASSIS FLEX AND WEIGHT SETTINGS

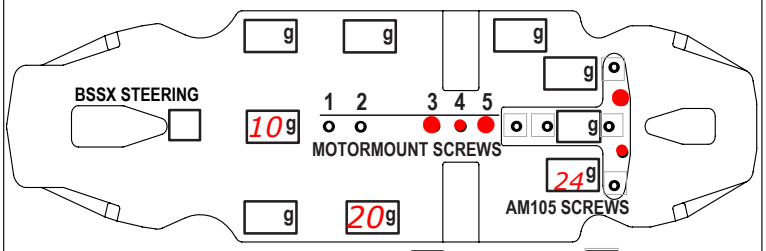

LOWER DECK C01B-X-MM2 ☑ C01B-X-MMA ☐

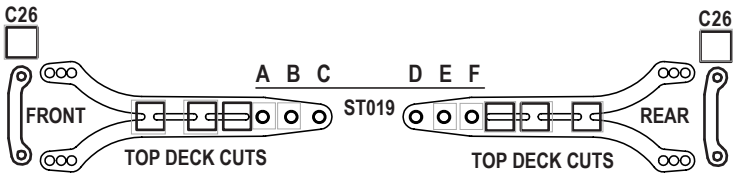

FRONT TOP DECK C127 ☐ C127S ☐ REAR TOP DECK C127 ☐ C127S ☐

TIRES: Matrix R36 ETS
INSERTS
WHEELS
ADDITIVE: MR33 V3 TIME - FR 10 RR 10
TOTAL WEIGHT WEIGHT DISTRIBUTION F % R %
NOTES: 1time 10min

MOTOR LATERAL SHIFT / MM	ACKERMANN POSITION Forward Position
MOTOR ETS Orca 13.5T	SERVO PowerHD
SPUR 100 PINION 42 RATIO 4.52	STEER TRAVEL IN 26 OUT
BODY Baybee 0.5	BATTERY LRP 8100 G4 Stock
WING STD	RECEIVER Futaba
ESC ETS Orca	RADIO Futaba
ESC SETTING	
BEST LAPTIME 18.933	QUALIF./FINAL POSITION 13 / 12

IFJ/IRJ Used/ HRB/ C07A/ C27MMX Without ST019
AT15 Used/ AM24-20/ BDL Front/ ADC Dampers
AM105 With 0.5mm Shims under
In front of motormount ST110
SB3x5AL Alloy screws used on top