AWESOMATIX A800MMX

SETUP SHEET

NAME	Simon Lauter	DATE	03.-04.07.2021
COUNTRY	Germany	TEMP. °C AIR / TRACK	/
RACE	TOS Andernach	TRACK CONDITION	ASPHALT ☑ OUTDOOR ☑ INDOOR ☐ CARPET ☐ / TECHNICAL ☐ MIXED ☑ FAST ☐
TRACK	Arena 33	TRACTION	LOW ☐ MEDIUM ☑ HIGH ☑

FRONT

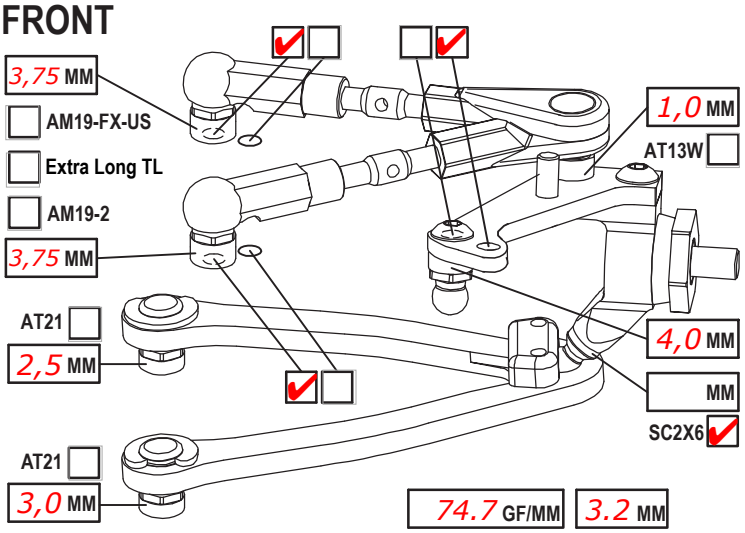

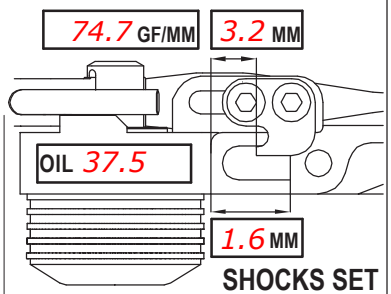

CAMBER ANGLE / °	2.5	SHOCKS SET	
CASTER ANGLE / °	4		
TOE ANGLE / °	1.0		
RIDE HEIGHT / MM	4,8		
DOWNSTOP / MM	6,0		
UPWNSTOP / MM	-	ROTOR	STD ☑
STABILIZER Ø / MM	1,1	SPRING	STD ☐ S ☑
LOW ARM C04M1+9.0	☑	DAMPER	D2.2 ☑
STEER. ARM AM14LS	☑	SRS/RHS ARR.	I ☑ II ☐
WHEEL SPACER / MM		PSS SETUP	25% ☑ 15% ☐
FRONT DRIVE	SPOOL ☑ GB2B ☐		LOW ☐ HIGH ☑
DIFF. OIL	DIFF WASHERS		
		WHEELHUB	AM06WL ☑

REAR

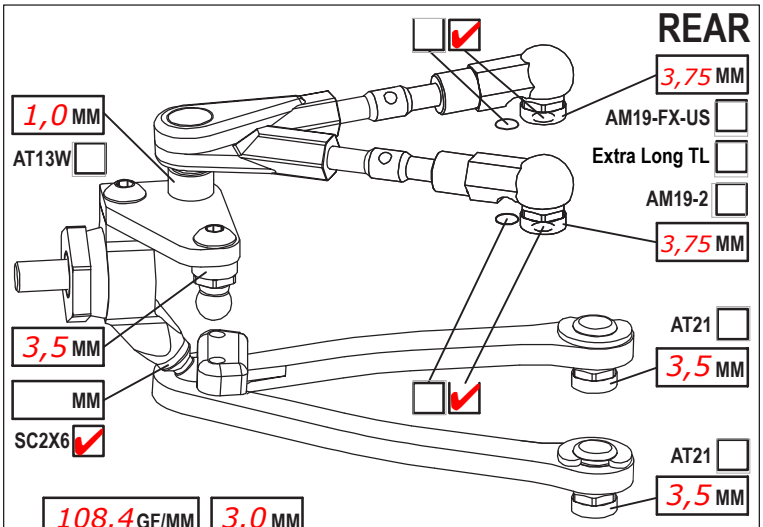

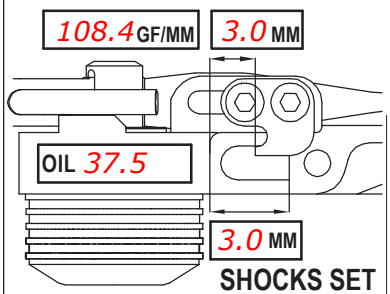

CAMBER ANGLE / °	2.25	SHOCKS SET	
CASTER ANGLE / °	-4		
TOE ANGLE / °	2.25		
RIDE HEIGHT / MM	5,2		
DOWNSTOP / MM	4,8		
UPWNSTOP / MM	-	ROTOR	STD ☑
STABILIZER Ø / MM	1,1	SPRING	STD ☑ S ☐
LOW ARM C04M1+8.0	☑	DAMPER	D2.2 ☑
STEER. ARM AM23-1	☑	SRS/RHS ARR.	I ☑ II ☐
WHEEL SPACER / MM		PSS SETUP	25% ☐ 15% ☐
REAR DRIVE	GB2B ☑		LOW ☐ HIGH ☑
DIFF. OIL 7,5k	DIFF WASHERS Small 5x7x0,4		
		WHEELHUB	AM06WL ☑

CHASSIS FLEX AND WEIGHT SETTINGS

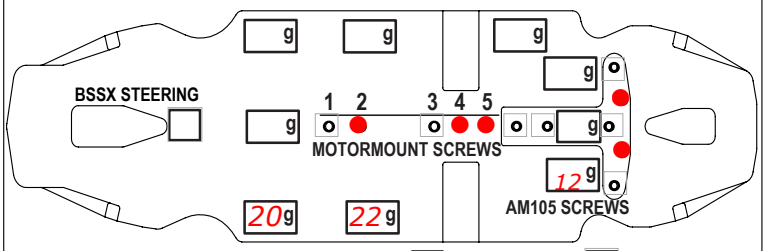

LOWER DECK C01B-X-MM2 ☑ C01B-X-MMA ☐

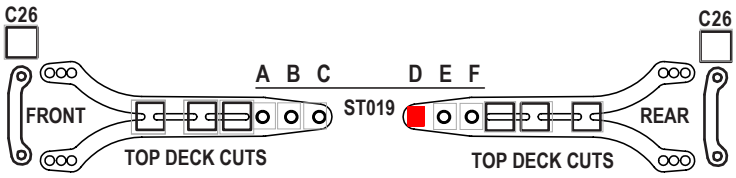

FRONT TOP DECK C127 ☐ C127S ☐ REAR TOP DECK C127 ☐ C127S ☐

TIRES	Matrix ETS		
INSERTS			
WHEELS			
ADDITIVE	MR33 V3 ETS	TIME - FR 1x15min	RR 1x15min
TOTAL WEIGHT	1325g	WEIGHT DISTRIBUTION F 49,3%	R 50,7%
NOTES:			

MOTOR LATERAL SHIFT / MM	1,75	ACKERMANN POSITION	Front
MOTOR	Orca 13,5 ETS	SERVO	Sanwa
SPUR 102 PINION 43 RATIO	4.51	STEER TRAVEL IN 25,5 OUT	
BODY	Baybee 0,5	BATTERY	LRP 8100
WING	Baybee 0,7	RECEIVER	RX482
ESC	Orca ETS	RADIO	M17
ESC SETTING	13.5 Limit		
BEST LAPTIME	19,3	QUALIF./FINAL POSITION	2 / /

C27mmx - AM88L+R in front - AT15 - SB3X5AL - HRB - AM24-20 - C07A - AM12X - BC1
Race cancelled after Q3 because of rain.