AWESOMATIX A800MMX

SETUP SHEET

NAME	Michele Manzo	DATE	05./06.06.21
COUNTRY	CH	TEMP. °C AIR / TRACK	/
RACE	Swiss Championship rd. 1	TRACK CONDITION	ASPHALT ☑ OUTDOOR ☑ INDOOR ☐ CARPET ☐
TRACK	Lostallo		TECHNICAL ☐ MIXED ☐ FAST ☑
		TRACTION	LOW ☐ MEDIUM ☑ HIGH ☐

FRONT

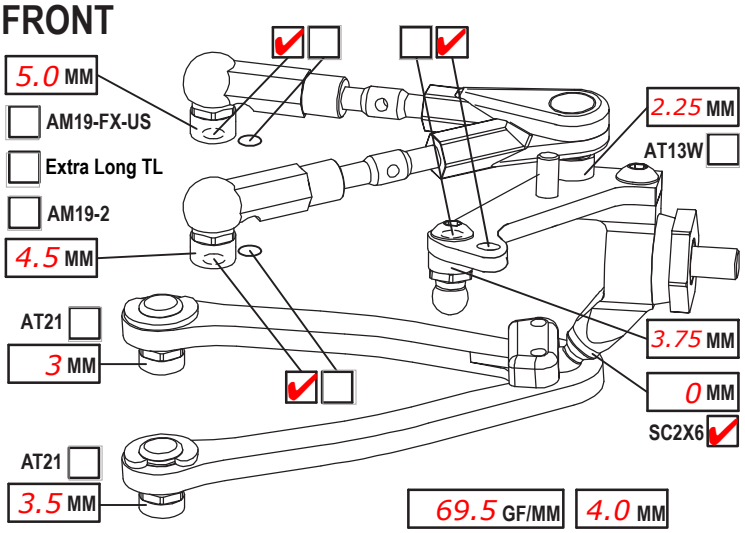

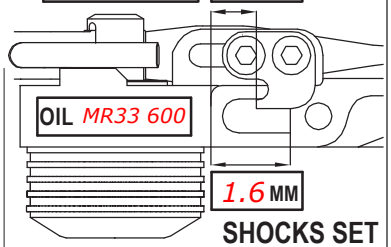

CAMBER ANGLE / °	1.5
CASTER ANGLE / °	5
TOE ANGLE / °	1
RIDE HEIGHT / MM	5.4
DOWNSTOP / MM	5.6
UPWNSTOP / MM	-
STABILIZER Ø / MM	1.0
LOW ARM C04M1+9.0	☑ ☐
STEER. ARM AM14LS	☑ ☐
WHEEL SPACER / MM	0

SHOCKS SET

ROTOR	STD ☑	☐
SPRING	STD ☐	S ☑
DAMPER	D2.2 ☑	☐
SRS/RHS ARR.	I ☑	II ☐
PSS SETUP	25% ☑	15% ☐

FRONT DRIVE SPOOL ☑ GB2B ☐ LOW ☐ HIGH ☑

DIFF. OIL - DIFF WASHERS -

WHEELHUB AM06WL ☑ ☐

REAR

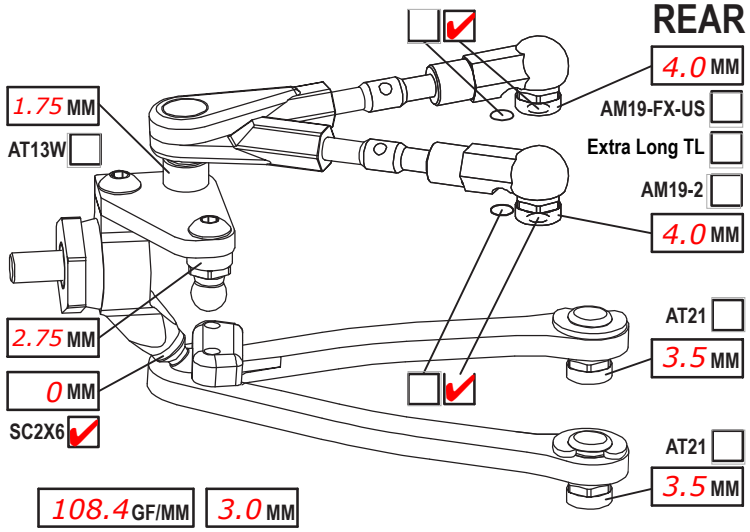

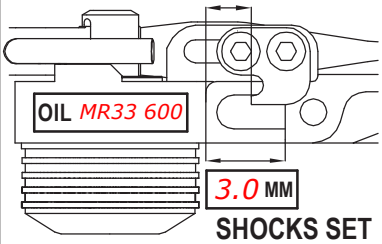

CAMBER ANGLE / °	1.5
CASTER ANGLE / °	-4
TOE ANGLE / °	2.8
RIDE HEIGHT / MM	5.6
DOWNSTOP / MM	4.6
UPWNSTOP / MM	-
STABILIZER Ø / MM	1.1
LOW ARM C04M1+8.0	☑ ☐
STEER. ARM AM23-1	☑ ☐
WHEEL SPACER / MM	

SHOCKS SET

ROTOR	STD ☑	☐
SPRING	STD ☑	S ☐
DAMPER	D2.2 ☑	☐
SRS/RHS ARR.	I ☑	II ☐
PSS SETUP	25% ☐	15% ☐

REAR DRIVE GB2B ☑ LOW ☐ HIGH ☑

DIFF. OIL 10k MR33 DIFF WASHERS small shims

WHEELHUB AM06WL ☑ ☐

CHASSIS FLEX AND WEIGHT SETTINGS

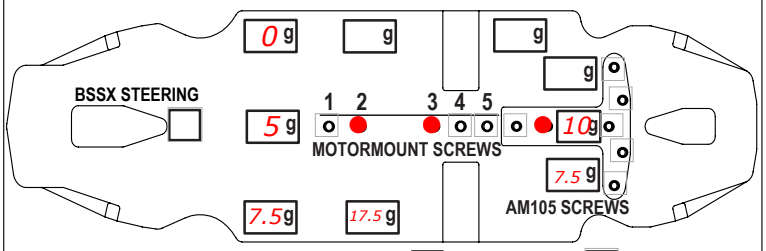

LOWER DECK C01B-X-MM2 ☑ C01B-X-MMA ☐

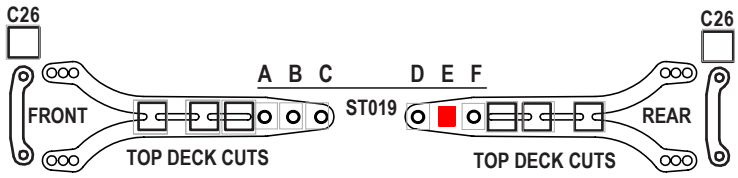

FRONT TOP DECK C127 ☐ C127S ☐ REAR TOP DECK C127 ☐ C127S ☐

TIRES	Sweep36 EXX
INSERTS	Soft
WHEELS	
ADDITIVE	MR33 V3
TIME - FR	12min RR 12min
TOTAL WEIGHT	1322
WEIGHT DISTRIBUTION	F 48 % R 52 %
NOTES:	70° heating

MOTOR LATERAL SHIFT / MM	0
MOTOR	HW G3 4.5T/ 37.5°
SPUR 114 PINION 30 RATIO	7.22
BODY	Wolverine 0.7
WING	std. 5mm back
ESC	HW XR10Pro G2 Elite
ESC SETTING	
BEST LAPTIME	14.619
QUALIF./FINAL POSITION	/
ACKERMANN POSITION	Full forward
SERVO	MKS HBL575SL
STEER TRAVEL IN	25 OUT
BATTERY	Sunpadow 5600
RECEIVER	
RADIO	

BDL
AT15
BW10
ADC
AM105 as weight 0.25 raised
C27MMX
P110 (+0.3)