AWESOMATIX A800MMX

SETUP SHEET

NAME	Max Mächler	DATE	09.05.2021
COUNTRY	Germany	TEMP. °C AIR / TRACK	/
RACE	Test 09.05.2021 - ETS SPEC		
TRACK	ARENA33 Andernach		

TRACK CONDITION				
ASPHALT ✔	OUTDOOR ✔	INDOOR ☐	CARPET ☐	
TECHNICAL ☐	MIXED ✔	FAST ☐		

TRACTION		
LOW ✔	MEDIUM ✔	HIGH ☐

FRONT

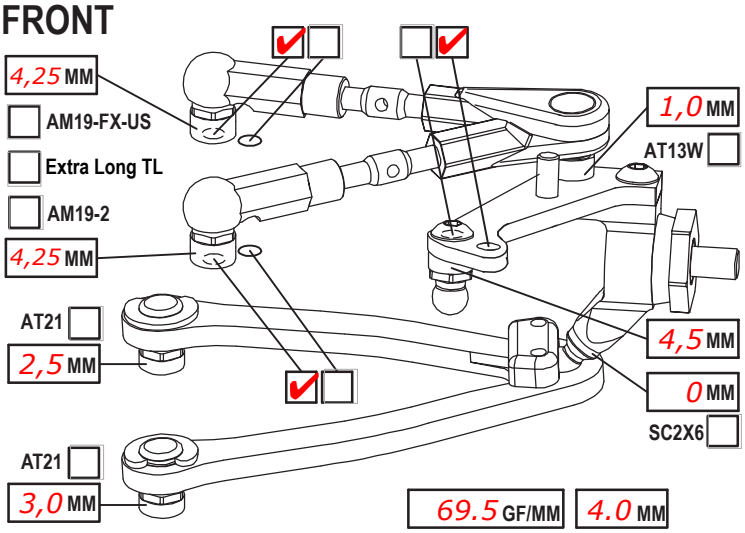

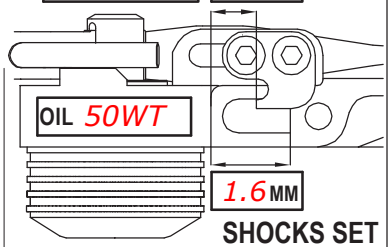

CAMBER ANGLE / °	2,25
CASTER ANGLE / °	4
TOE ANGLE / °	1,0 per side
RIDE HEIGHT / MM	5,0
DOWNSTOP / MM	6,0
UPWNSTOP / MM	-
STABILIZER Ø / MM	1,1
LOW ARM C04M1+9.0	✔ ☐
STEER. ARM AM14LS	✔ ☐
WHEEL SPACER / MM	-

SHOCKS SET

ROTOR	STD ✔	☐
SPRING	STD ☐	S ✔
DAMPER	D2.2 ✔	☐
SRS/RHS ARR.	I ✔	II ☐
PSS SETUP	25% ✔	15% ☐

FRONT DRIVE	SPOOL ✔	GB2B ☐	LOW ☐ HIGH ✔
DIFF. OIL	DIFF WASHERS		
	WHEELHUB	AM06WL ✔	☐

REAR

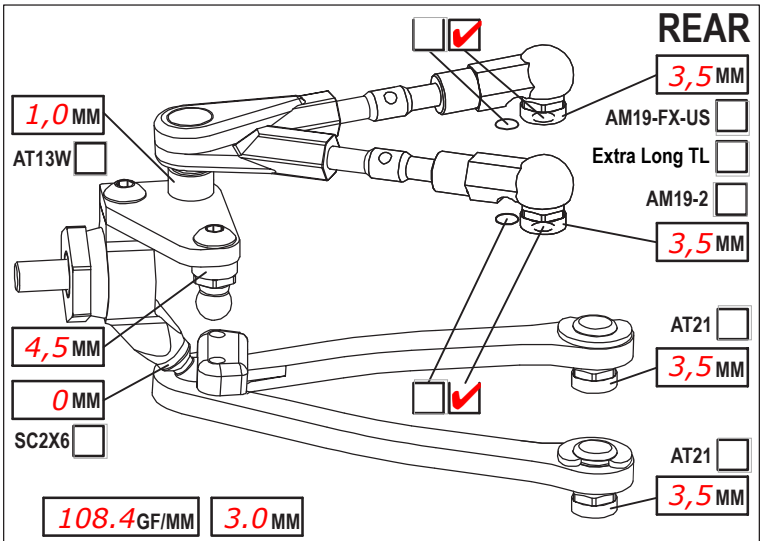

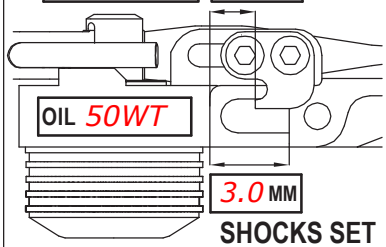

CAMBER ANGLE / °	2,25
CASTER ANGLE / °	-4 short
TOE ANGLE / °	2,75
RIDE HEIGHT / MM	5,2
DOWNSTOP / MM	4,8
UPWNSTOP / MM	-
STABILIZER Ø / MM	1,1
LOW ARM C04M1+8.0	✔ ☐
STEER. ARM AM23-1	✔ ☐
WHEEL SPACER / MM	-

SHOCKS SET

ROTOR	STD ✔	☐
SPRING	STD ✔	S ☐
DAMPER	D2.2 ✔	☐
SRS/RHS ARR.	I ✔	II ☐
PSS SETUP	25% ☐	15% ☐

REAR DRIVE	GB2B ✔	LOW ☐	HIGH ✔
DIFF. OIL 7500	DIFF WASHERS SH5x7x0.4		
	WHEELHUB	AM06WL ✔	☐

CHASSIS FLEX AND WEIGHT SETTINGS

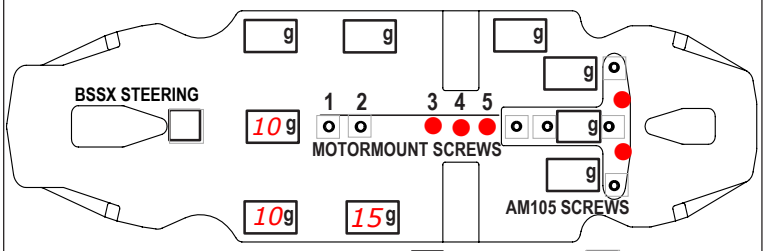

LOWER DECK C01B-X-MM2 ✔ C01B-X-MMA ☐

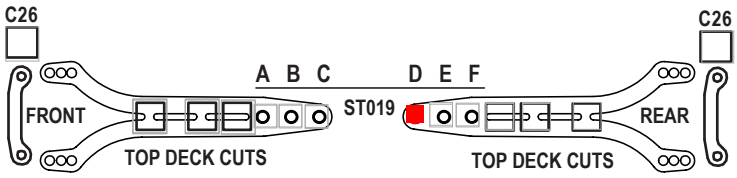

FRONT TOP DECK C127 ☐ C127S ☐ REAR TOP DECK C127 ☐ C127S ☐

TIRES	MATRIX ETS		
INSERTS	-		
WHEELS	-		
ADDITIVE	MR33	TIME - FR 15	RR 15
TOTAL WEIGHT 1325	WEIGHT DISTRIBUTION F 49 %	R 51 %	
NOTES:			

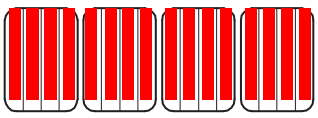

MOTOR LATERAL SHIFT / MM 2,0	ACKERMANN POSITION max. forward
MOTOR ORCA ETS 13,5T	SERVO MKS HBL575 SL
SPUR 102 PINION 43 RATIO 4.51	STEER TRAVEL IN 25 OUT -
BODY Zoo Wolverine (neutral mount)	BATTERY Sunpadow 8000
WING Std.	RECEIVER Sanwa RX491
ESC ORCA ETS	RADIO Sanwa M17
ESC SETTING 0-Boost / RPM Limit	
BEST LAPTIME 19,6	QUALIF./FINAL POSITION - / -

Option parts: HRB / AT15 (F+R) / SB3x5AL / C07A / AM24-20 / BDL (in front) / C27MMX
- ADC Damper cups used --> 50WT oil / AXON oil used in damper and diff.
- 0,5mm shims under AM105 brace screws
- MXLR Tungsten weights: 10g at servo / 15g under receiver / 20g under ESC
- MXLR Wing Mount setting: 3rd hole from front (5th hole from front when grip was lower!)