AWESOMATIX A800MMX

SETUP SHEET

NAME	Max Mächler	DATE	31.05.2020
COUNTRY	GERMANY	TEMP. °C AIR / TRACK	21 / 45
RACE	RCK-Challenge	TRACK CONDITION	ASPHALT ☑ OUTDOOR ☑ INDOOR ☐ CARPET ☐ TECHNICAL ☐ MIXED ☑ FAST ☐
TRACK	TC Heuchelheim	TRACTION	LOW ☐ MEDIUM ☑ HIGH ☐

FRONT

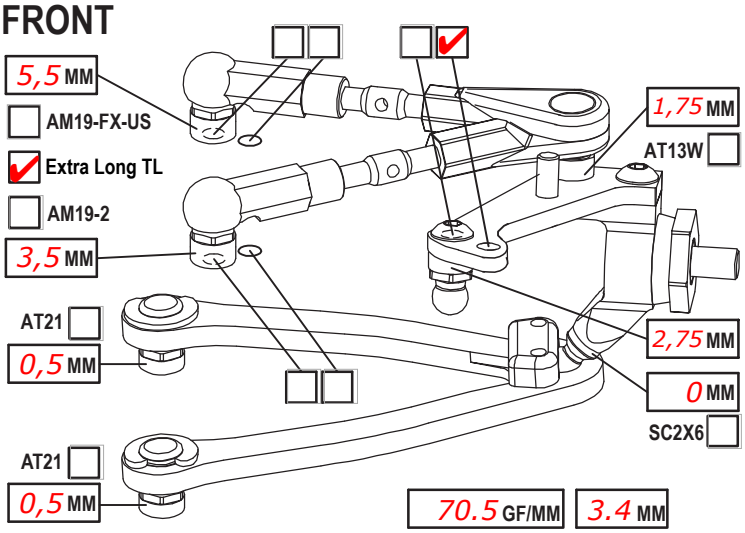

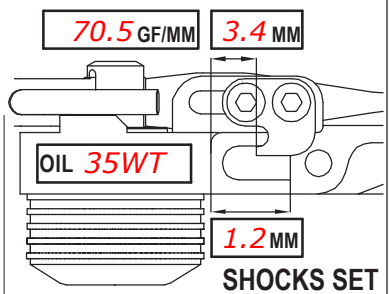

CAMBER ANGLE / °	2,25	SHOCKS SET	
CASTER ANGLE / °	5		
TOE ANGLE / °	1,0 per side		
RIDE HEIGHT / MM	5,2		
DOWNSTOP / MM	5,6		
UPWNSTOP / MM	-	ROTOR	STD ☑
STABILIZER Ø / MM	1,0	SPRING	STD ☐ S ☑
LOW ARM C04M1+9.0 ☐	+8 ☑	DAMPER	D2.2 ☑
STEER. ARM AM14LS ☑	☐	SRS/RHS ARR.	I ☑ II ☐
WHEEL SPACER / MM	-	PSS SETUP	25% ☑ 15% ☐
FRONT DRIVE	SPOOL ☑ GB2B ☐		LOW ☐ HIGH ☑
DIFF. OIL	DIFF WASHERS		
		WHEELHUB	AM06WL ☑ ☐

REAR

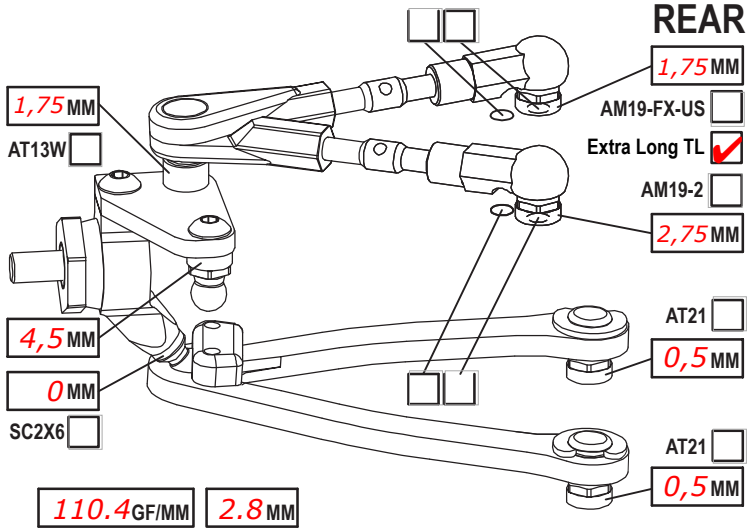

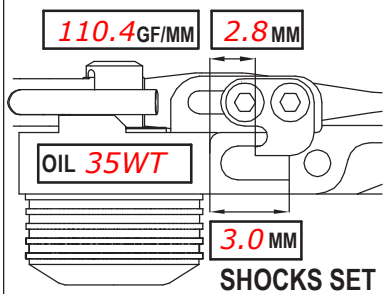

CAMBER ANGLE / °	2,25	SHOCKS SET	
CASTER ANGLE / °	-2 short		
TOE ANGLE / °	2,5		
RIDE HEIGHT / MM	5,4		
DOWNSTOP / MM	4,4		
UPWNSTOP / MM	-	ROTOR	STD ☑
STABILIZER Ø / MM	1,1	SPRING	STD ☑ S ☐
LOW ARM C04M1+8.0 ☑	☐	DAMPER	D2.2 ☑
STEER. ARM AM23-1 ☑	☐	SRS/RHS ARR.	I ☑ II ☐
WHEEL SPACER / MM	-	PSS SETUP	25% ☐ 15% ☑
REAR DRIVE	GB2B ☑		LOW ☐ HIGH ☑
DIFF. OIL 5000	DIFF WASHERS SH5x7x0.4		
		WHEELHUB	AM06WL ☑ ☐

CHASSIS FLEX AND WEIGHT SETTINGS

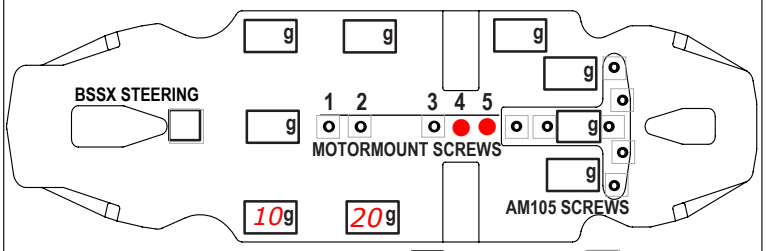

LOWER DECK C01B-X-MM2 ☑ C01B-X-MMA ☐

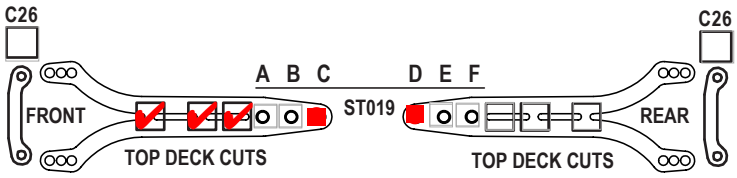

FRONT TOP DECK C127 ☑ C127S ☐ REAR TOP DECK C127 ☑ C127S ☐

TIRES	RCK 36A (190001)		
INSERTS			
WHEELS			
ADDITIVE		TIME - FR 15	RR 15
TOTAL WEIGHT 1340	WEIGHT DISTRIBUTION F 50 %	R 50 %	
NOTES:			

MOTOR LATERAL SHIFT / MM 2,0	ACKERMANN POSITION max. backwards
MOTOR RCK 13,5T (190004)	SERVO MKS HBL575 SL
SPUR 102 PINION 43 RATIO 4.51	STEER TRAVEL IN 26 OUT
BODY ZooRacing DBX	BATTERY Sunpadow 8400 Gold Series
WING Std.	RECEIVER Sanwa 491
ESC HW XR10 Pro G2	RADIO Sanwa M17
ESC SETTING Blinky	
BEST LAPTIME 10,5	QUALIF./FINAL POSITION 1 / 1

- AT15 Bearing Spacer in Wheel Hubs.
- Axon Oil used in Damper and Diff.
- SB3x5AL screws on top side of the car.
- Extra long top links front and rear. (used AT25-2 instead of AT14)