AWESOMATIX A800 MMCX

SETUP SHEET
M. Mächler / Arn0

NAME	Lucas Urbain	DATE 28.07.19	TEMP. °C AIR / TRACK /
COUNTRY	France	ASPHALT ☑ (OUTDOOR ☑ INDOOR ☐)	CARPET ☐
RACE	ETS Hudy Arena	TRACK CONDITION TECHNICAL ☐	MIXED ☐ FAST ☑
TRACK	Hudy Arena Clockwise	TRACTION LOW ☐	MEDIUM ☑ HIGH ☑

FRONT

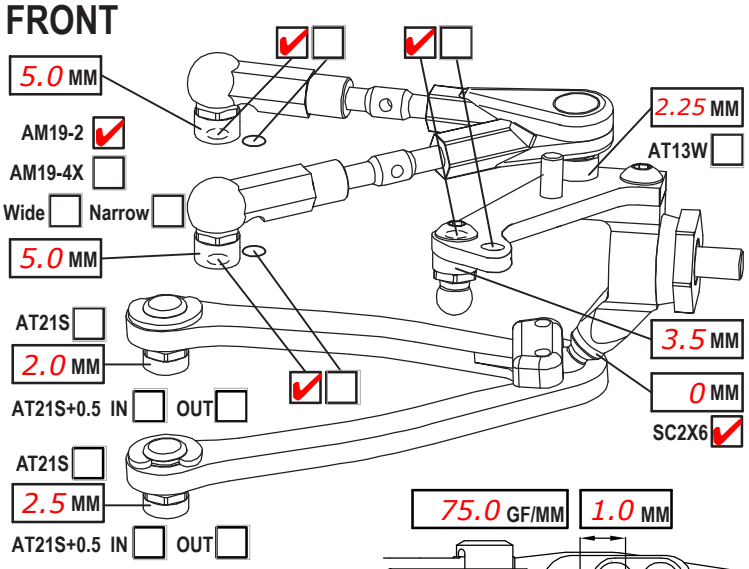

75.0 GF/MM | 1.0 MM

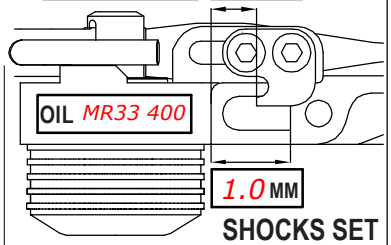

SHOCKS SET

CAMBER ANGLE / °	2.2	ROTOR	STD ☑ ☐
CASTER ANGLE / °	4.0	SPRING	STD ☑ S ☐
TOE ANGLE / °	1.0	DAMPER	D2.2 ☑ ☐
RIDE HEIGHT / MM	5.2	SRS/RHS ARR.	I ☐ II ☑
DOWNSTOP / MM	5.7	PSS SETUP	25% MM A ☐ B ☐
UPWNSTOP / MM	/		
STABILIZER Ø / MM	1.0		
LOW ARM C04M1+0.5 ☐	+9 ☐		
STEER. ARM AM14LS ☑	☐		
WHEEL SPACER / MM	0		

FRONT DRIVE SPOOL ☑ GB2B ☐ LOW ☐ HIGH ☑

DIFF. OIL | DIFF WASHERS

DOGBONE DRIVE ST02 ☐ | WHEELHUB AM06WL ☑ ☐

REAR

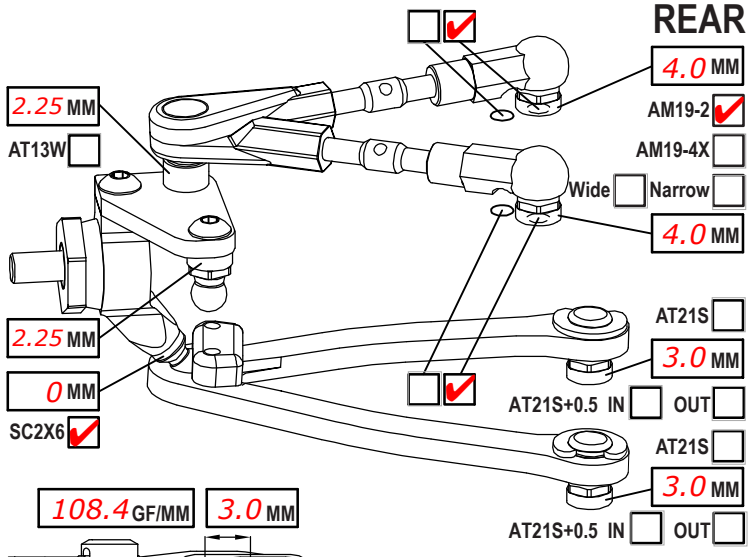

108.4 GF/MM | 3.0 MM

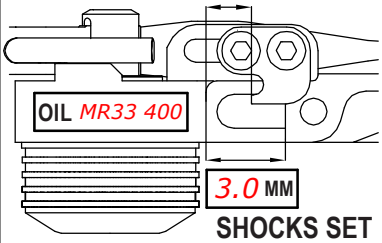

SHOCKS SET

CAMBER ANGLE / °	2	ROTOR	STD ☑ ☐
CASTER ANGLE / °	-4 Short	SPRING	STD ☑ S ☐
TOE ANGLE / °	2.8	DAMPER	D2.2 ☑ ☐
RIDE HEIGHT / MM	5.6	SRS/RHS ARR.	I ☑ II ☐
DOWNSTOP / MM	4.6	PSS SETUP	/ MM A ☐ B ☐
UPWNSTOP / MM	/		
STABILIZER Ø / MM	1.1		
LOW ARM C04M1+0.5 ☐	+8 ☐		
STEER. ARM AM23 ☑	☐		
WHEEL SPACER / MM	0		

REAR DRIVE GB2B ☑ LOW ☐ HIGH ☑

DIFF. OIL MR33 10K | DIFF WASHERS Small Shims

DOGBONE DRIVE EVD ☐ | WHEELHUB AM06WL ☑ ☐

FRAME FLEX SETTING

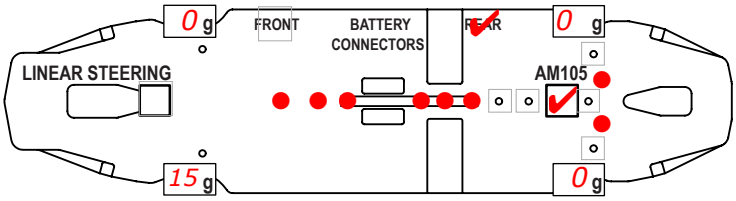

LOWER DECK C01B-X-MM ☑ C01B-A-MM ☐ C01B-AH-MM ☐

SHIM UNDER AM105 0.3 ST55 ☑ ☐

ST105/ST110 DOWN/SOFT ☑ UP/STIFF ☐

MOTOR MOUNT AM77MM

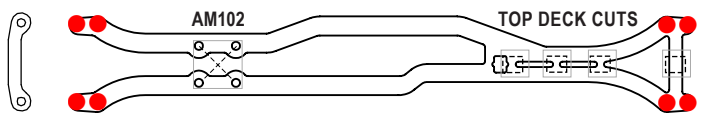

☐ ☐ ST09 TOP DECK C27MM2 ☑ ☐ ST09 ☐

TIRES	Volante ETS
INSERTS	
WHEELS	
ADDITIVE	MR33 V4

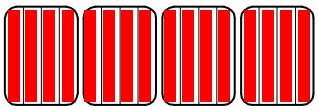

TIME - FR 20min RR 20min

NOTES

MOTOR LATERAL SHIFT / MM 0	ACKERMANN SHIMS / MM 1
MOTOR MM Fleta ZX V2 HE 4.5T	SERVO Power HD R12
SPUR 113 PINION 30 RATIO 7.16	STEER TRAVEL IN 24 OUT
BODY Hellcat 0.7	BATTERY Silverback Spiral G 5200
WING Hellcat	RECEIVER Sanwa RX482
ESC MM Fleta Pro V2	RADIO Sanwa M12S
ESC SETTING	
BEST LAPTIME 16.9	QUALIF./FINAL POSITION 4 / 7

COMMENTS

IFJ / RFJ
12g under motor fan
SPR08 up front limiting body down travel to 1mm above ground level
BW22 battery weights used with ULCG battery

www.petitrc.com