AWESOMATIX A800 MMCX

SETUP SHEET
M. Mächler / Arn0

NAME	JASMIN LOIC	DATE	25-28/07/2019
COUNTRY	FRANCE	TEMP. °C AIR / TRACK	35 / 60
RACE	ETS R6	ASPHALT ☑ (OUTDOOR ☑ INDOOR ☐)	CARPET ☐
TRACK	HUDY ARENA	TRACK CONDITION: TECHNICAL ☐ MIXED ☐	FAST ☑
		TRACTION: LOW ☐ MEDIUM ☑	HIGH ☐

FRONT

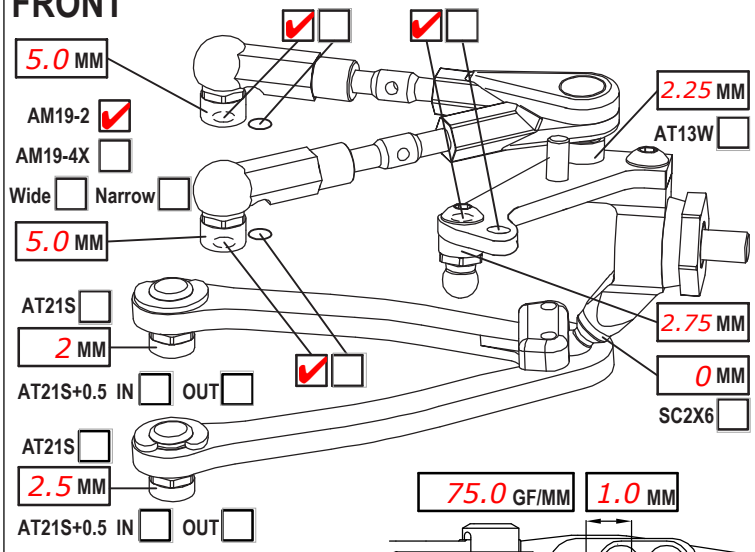

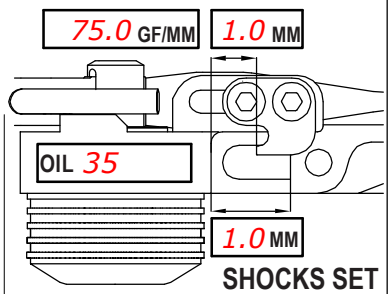

CAMBER ANGLE / °	2	SHOCKS SET	
CASTER ANGLE / °	4.0		
TOE ANGLE / °	1		
RIDE HEIGHT / MM	5.2		
DOWNSTOP / MM	5.8	ROTOR	STD ☑ ☐
UPWNSTOP / MM	/	SPRING	STD ☑ S ☐
STABILIZER Ø / MM	1.0	DAMPER	D2.2 ☑ ☐
LOW ARM C04M1+0.5 ☐	+9 ☑	SRS/RHS ARR.	I ☐ II ☑
STEER. ARM AM14LS ☑	☐	PSS SETUP 25%	MM A ☐ B ☐
WHEEL SPACER / MM	/		
FRONT DRIVE	SPOOL ☑ GB2B ☐	LOW ☐	HIGH ☑
DIFF. OIL	DIFF WASHERS		
DOGBONE DRIVE	ST02 ☐	WHEELHUB AM06WL ☑	☐

REAR

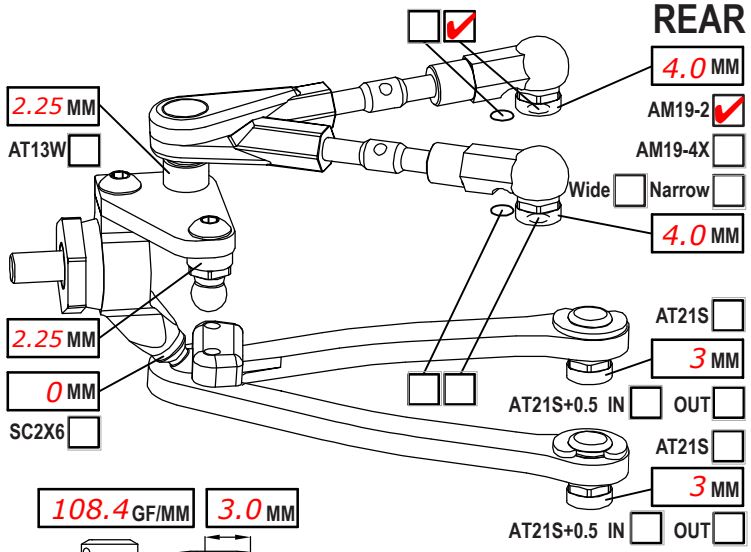

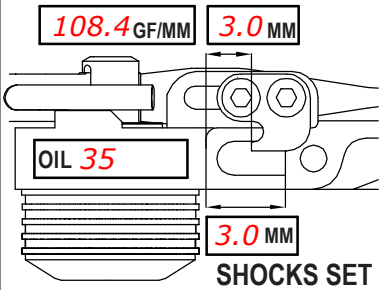

CAMBER ANGLE / °	2	SHOCKS SET	
CASTER ANGLE / °	-4		
TOE ANGLE / °	3		
RIDE HEIGHT / MM	5.6		
DOWNSTOP / MM	5	ROTOR	STD ☑ ☐
UPWNSTOP / MM	/	SPRING	STD ☑ S ☐
STABILIZER Ø / MM	1.1	DAMPER	D2.2 ☑ ☐
LOW ARM C04M1+0.5 ☐	+8 ☑	SRS/RHS ARR.	I ☑ II ☐
STEER. ARM AM23 ☐	☐	PSS SETUP	MM A ☐ B ☐
WHEEL SPACER / MM	/		
REAR DRIVE	GB2B ☐	LOW ☐	HIGH ☑
DIFF. OIL 7.5k	DIFF WASHERS SH5x7x0.4		
DOGBONE DRIVE	EVD ☐	WHEELHUB AM06WL ☑	☐

FRAME FLEX SETTING

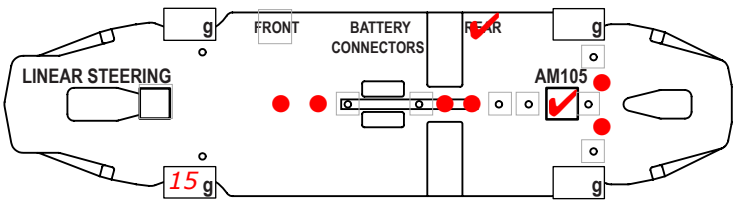

LOWER DECK C01B-X-MM ☑ C01B-X-MMA ☐ ☐
SHIM UNDER AM105 0.5 ST55 ☑ ☐
ST105/ST110 DOWN/SOFT ☑ UP/STIFF ☐
MOTOR MOUNT AM77MM

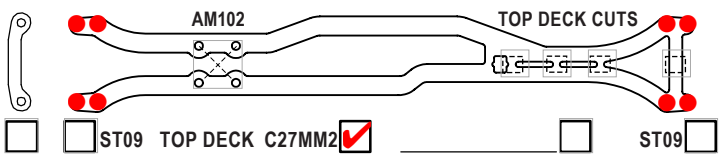

TIRES	Volante ETS
INSERTS	
WHEELS	
ADDITIVE	ETS
TIME - FR 20	RR 20

NOTES

MOTOR LATERAL SHIFT / MM 0	ACKERMANN SHIMS / MM 1
MOTOR LRP X22 4.5T	SERVO DLP680
SPUR 112 PINION 29 RATIO 7.34	STEER TRAVEL IN 25 OUT
BODY DBX 0.7	BATTERY LRP 5500 LCG G3
WING std	RECEIVER RX482
ESC LRP FLOW X	RADIO M12S
ESC SETTING	
BEST LAPTIME 17.2	QUALIF./FINAL POSITION 6 / 5

COMMENTS

15g beside the receiver
SPR08 on the front
Axon oils

www.petitrc.com