AWESOMATIX A800 MMCX

SETUP SHEET
M. Mächler / Arn0

NAME	Max Hordijk	DATE	7 July
COUNTRY	The Netherlands	TEMP. °C AIR / TRACK	18 / 26
RACE	Dutch Nationals 2019		
TRACK	Mac de Baanbrekers		

	ASPHALT ☑	(OUTDOOR ☑	INDOOR ☐)	CARPET ☐
TRACK CONDITION	TECHNICAL ☐	MIXED ☐	FAST ☑	
TRACTION	LOW ☐	MEDIUM ☐	HIGH ☑	

FRONT

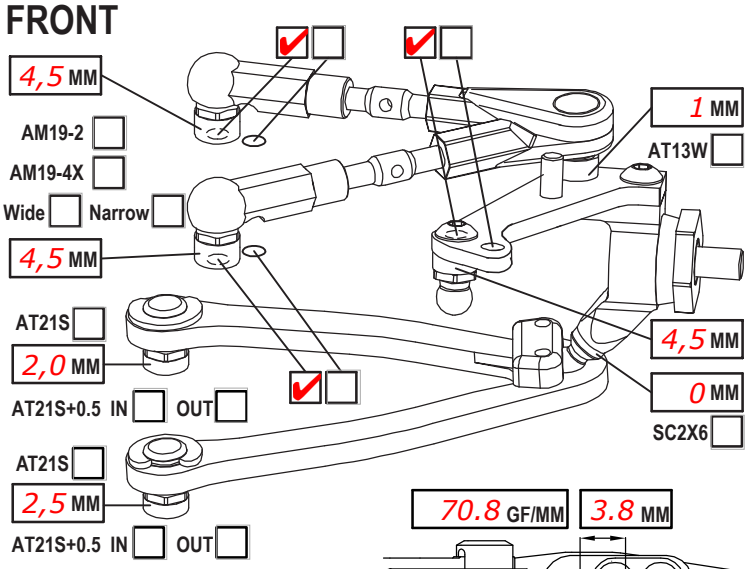

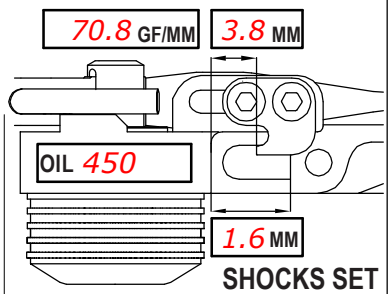

SHOCKS SET

CAMBER ANGLE / °	2,2
CASTER ANGLE / °	4
TOE ANGLE / °	1 out each side
RIDE HEIGHT / MM	5,4
DOWNSTOP / MM	5,8
UPWNSTOP / MM	-
STABILIZER Ø / MM	1,1
LOW ARM C04M1+0.5 ☐	+9 ☑
STEER. ARM AM14LS ☐	☐
WHEEL SPACER / MM	

ROTOR	STD ☑	☐
SPRING	STD ☐	S ☑
DAMPER	D2.2 ☑	☐
SRS/RHS ARR.	I ☑	II ☐
PSS SETUP 25% MM	A ☐	B ☐

FRONT DRIVE	SPOOL ☑	GB2B ☐	LOW ☐ HIGH ☑
DIFF. OIL	DIFF WASHERS		
DOGBONE DRIVE	ST02 ☐	WHEELHUB	AM06WL ☐ ☐

REAR

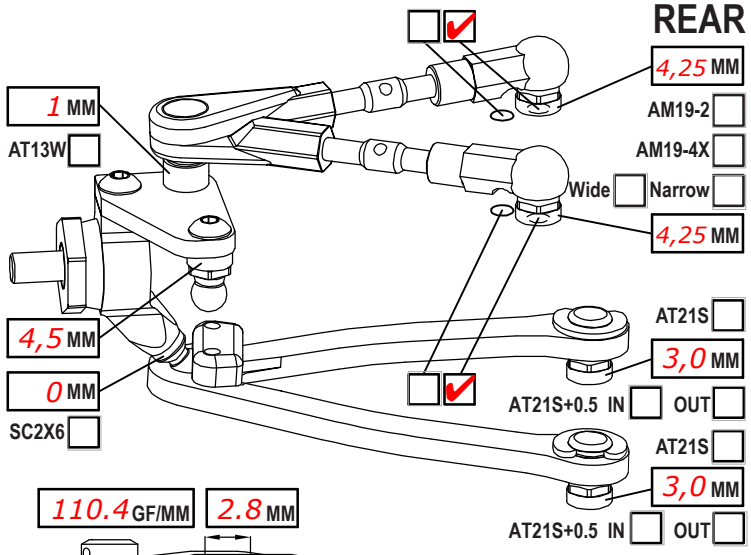

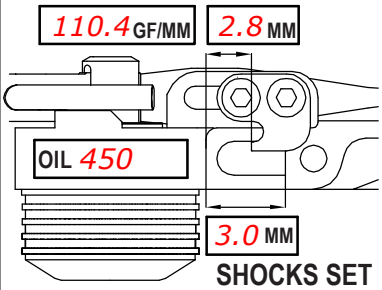

SHOCKS SET

CAMBER ANGLE / °	2,2
CASTER ANGLE / °	-3 (short)
TOE ANGLE / °	2,25
RIDE HEIGHT / MM	5,6
DOWNSTOP / MM	4,6
UPWNSTOP / MM	-
STABILIZER Ø / MM	1,2
LOW ARM C04M1+0.5 ☐	+8 ☑
STEER. ARM AM23 ☐	☐
WHEEL SPACER / MM	

ROTOR	STD ☑	☐
SPRING	STD ☑	S ☐
DAMPER	D2.2 ☑	☐
SRS/RHS ARR.	I ☑	II ☐
PSS SETUP MM	A ☐	B ☐

REAR DRIVE	GB2B ☑	LOW ☐	HIGH ☑
DIFF. OIL 8K	DIFF WASHERS		
DOGBONE DRIVE	EVD ☐	WHEELHUB	AM06WL ☐ ☐

FRAME FLEX SETTING

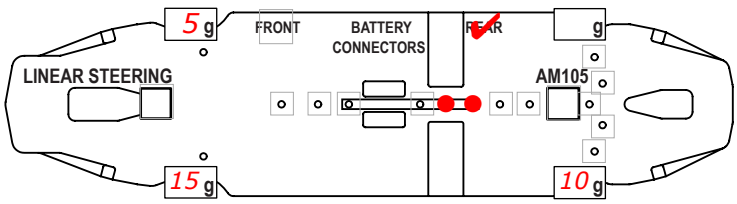

LOWER DECK C01B-X-MM ☑ C01B-X-MMA ☐ ☐
SHIM UNDER AM105 ☐ ST55 ☐
ST105/ST110 DOWN/SOFT ☐ UP/STIFF ☐
MOTOR MOUNT AM77M

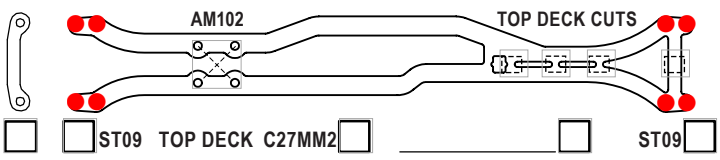

TIRES	Rush 36X		
INSERTS	Rush 36X		
WHEELS	Rush 36X		
ADDITIVE	MR33 V3	TIME - FR 20	RR 20

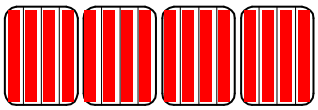

NOTES

High tire wear because of very rough asphalt surface

MOTOR LATERAL SHIFT / MM 2,0	ACKERMANN SHIMS / MM 1.0
MOTOR MM Fleta V2	SERVO Highest
SPUR 102 PINION 43 RATIO 4.51	STEER TRAVEL IN OUT 26
BODY DBX	BATTERY Sunpadow 8400Mah
WING DBX	RECEIVER Sanwa
ESC MM Fleta V2	RADIO Sanwa
ESC SETTING RPM Limiter	
BEST LAPTIME 16,2	QUALIF./FINAL POSITION 1 / 1

COMMENTS

Car was very consistent and fast cornerspeed.
Alu screws on top

www.petitrc.com