AWESOMATIX A800 MMCX

SETUP SHEET
M. Mächler / Arn0

NAME	JASMIN LOIC	DATE	13-15/06/2019
COUNTRY	FRANCE	TEMP. °C AIR / TRACK	35 / 60
RACE	EUROPEAN CHAMPIONSHIP	TRACK CONDITION	ASPHALT ☑ (OUTDOOR ☑ INDOOR ☐) CARPET ☐
TRACK	HUDY ARENA	TRACTION	TECHNICAL ☐ MIXED ☑ FAST ☐ / LOW ☐ MEDIUM ☑ HIGH ☐

FRONT

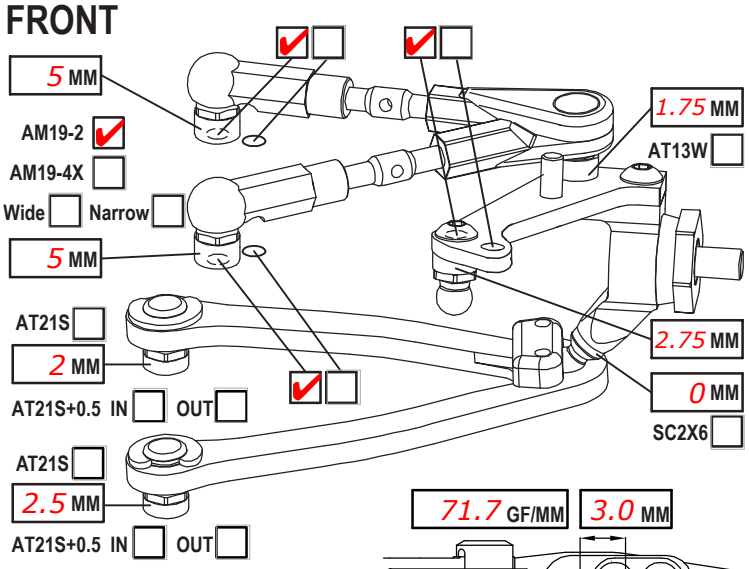

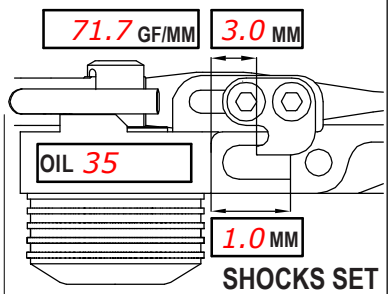

SHOCKS SET

CAMBER ANGLE / °	2	ROTOR	STD ☑ ☐
CASTER ANGLE / °	4.5	SPRING	STD ☐ S ☑
TOE ANGLE / °	1	DAMPER	D2.2 ☑ ☐
RIDE HEIGHT / MM	5.2	SRS/RHS ARR.	I ☑ II ☐
DOWNSTOP / MM	5.6	PSS SETUP	25% MM A ☐ B ☐
UPWNSTOP / MM	/		
STABILIZER Ø / MM	1.0		
LOW ARM C04M1+0.5 ☐	+9 ☑		
STEER. ARM AM14LS ☑	☐		
WHEEL SPACER / MM	/		
FRONT DRIVE	SPOOL ☑ GB2B ☐	LOW ☐	HIGH ☑
DIFF. OIL		DIFF WASHERS	
DOGBONE DRIVE	ST02 ☐	WHEELHUB	AM06WL ☑ ☐

REAR

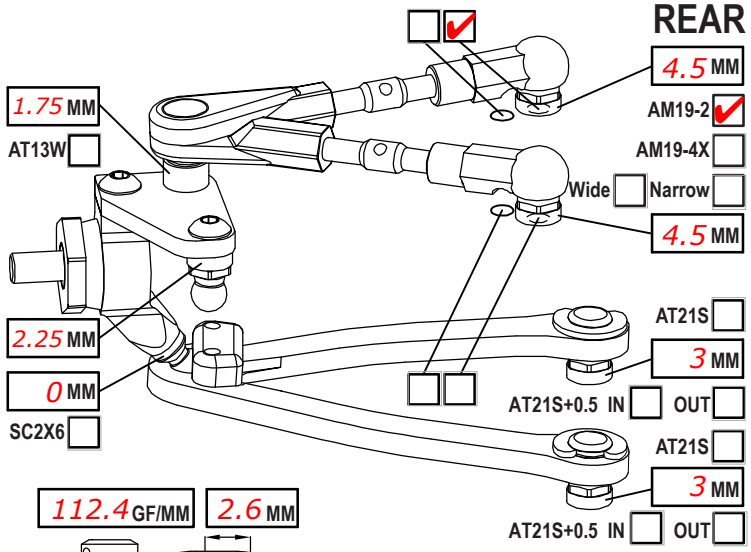

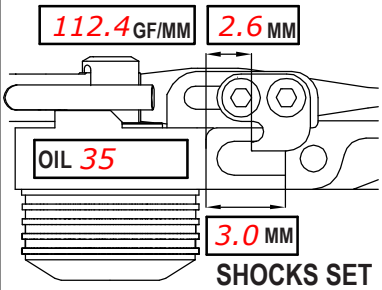

SHOCKS SET

CAMBER ANGLE / °	2	ROTOR	STD ☑ ☐
CASTER ANGLE / °	-4	SPRING	STD ☑ S ☐
TOE ANGLE / °	2.8	DAMPER	D2.2 ☑ ☐
RIDE HEIGHT / MM	5.5	SRS/RHS ARR.	I ☑ II ☐
DOWNSTOP / MM	4.8	PSS SETUP	MM A ☐ B ☐
UPWNSTOP / MM	/		
STABILIZER Ø / MM	1.1		
LOW ARM C04M1+0.5 ☐	+8 ☑		
STEER. ARM AM23 ☐	☐		
WHEEL SPACER / MM	/		
REAR DRIVE	GB2B ☐	LOW ☐	HIGH ☑
DIFF. OIL	7500	DIFF WASHERS	SH5x7x0.4
DOGBONE DRIVE	EVD ☐	WHEELHUB	AM06WL ☑ ☐

FRAME FLEX SETTING

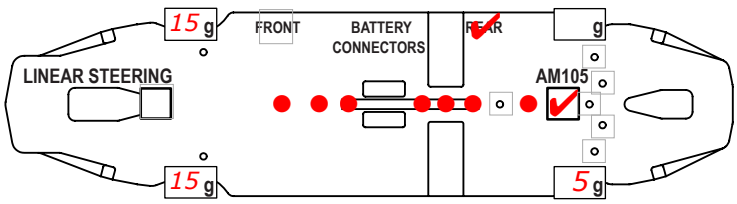

LOWER DECK C01B-X-MM ☑ C01B-X-MMA ☐ ☐
SHIM UNDER AM105 0.5 ST55 ☑ ☐
ST105/ST110 DOWN/SOFT ☑ UP/STIFF ☐
MOTOR MOUNT AM77MM

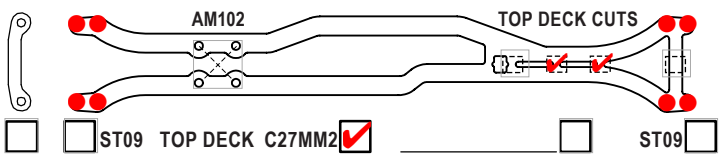

TIRES	HUDY
INSERTS	
WHEELS	
ADDITIVE	HUDY
TIME - FR	15
RR	15

NOTES

MOTOR LATERAL SHIFT / MM 0	ACKERMANN SHIMS / MM 1
MOTOR LRP X22 4.5T	SERVO DLP680
SPUR 113 PINION 29 RATIO 7.40	STEER TRAVEL IN 25 OUT
BODY DBX 0.7	BATTERY LRP 6400 LCG G3
WING std	RECEIVER RX482
ESC LRP FLOW X	RADIO M12S
ESC SETTING	
BEST LAPTIME 17.7	QUALIF./FINAL POSITION 15 / 15

COMMENTS

www.petitrc.com