AWESOMATIX A800 MMCX

SETUP SHEET
M. Mächler / Arn0

NAME	Olivier Bultynck	DATE	04-07/04
COUNTRY	Spain	TEMP. °C AIR / TRACK	/
RACE	ETS R3 2018/2019	ASPHALT ☑ (OUTDOOR ☑ INDOOR ☐)	CARPET ☐
TRACK	Asogar Getafe	TRACK CONDITION: TECHNICAL ☐ MIXED ☑	FAST ☐
		TRACTION: LOW ☑ MEDIUM ☑	HIGH ☐

FRONT

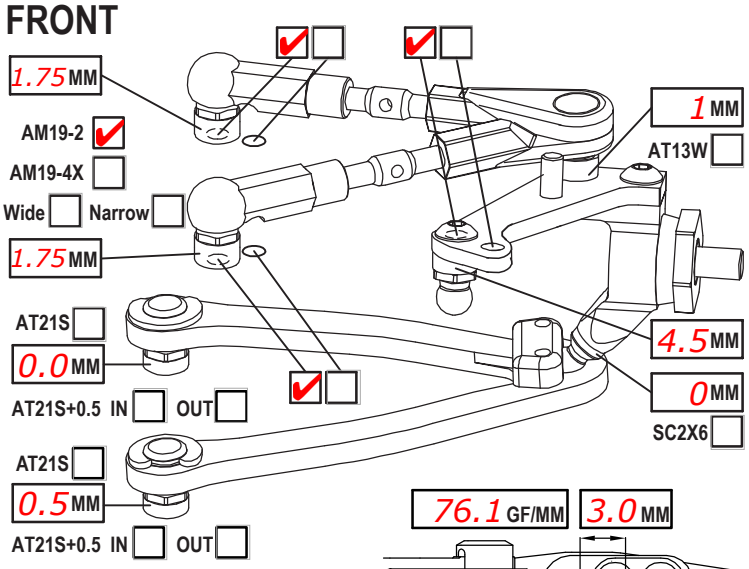

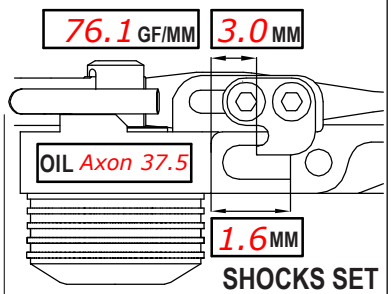

SHOCKS SET

CAMBER ANGLE / °	2	ROTOR	STD ☑
CASTER ANGLE / °	4.0	SPRING	STD ☐ S ☑
TOE ANGLE / °	1.0 each side	DAMPER	D2.2 ☑
RIDE HEIGHT / MM	5.2	SRS/RHS ARR.	I ☑ II ☐
DOWNSTOP / MM	5.8	PSS SETUP	MM A ☐ B ☐
UPWNSTOP / MM			
STABILIZER Ø / MM	1.2		
LOW ARM C04M1+0.5 ☐	+9.0 ☑		
STEER. ARM AM14LS ☑	☐		
WHEEL SPACER / MM			

FRONT DRIVE: SPOOL ☑ GB2B ☐ LOW ☐ HIGH ☑
DIFF. OIL | DIFF WASHERS
DOGBONE DRIVE: ST02 ☐ WHEELHUB: AM06WL ☑ ☐

REAR

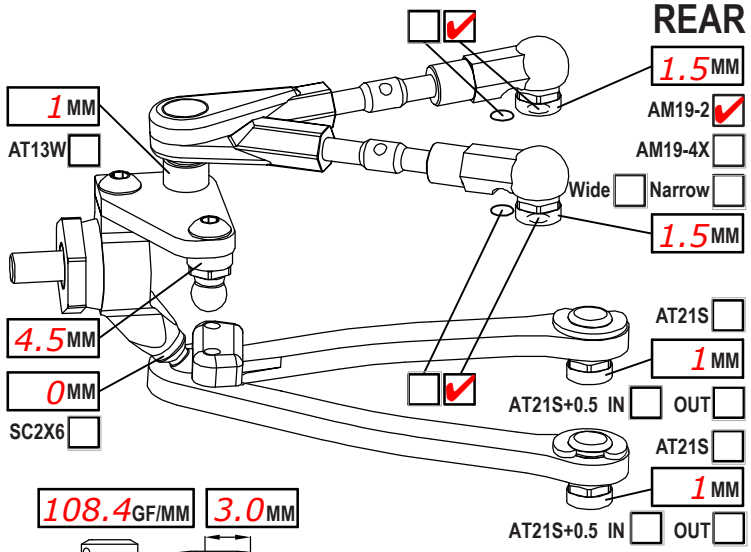

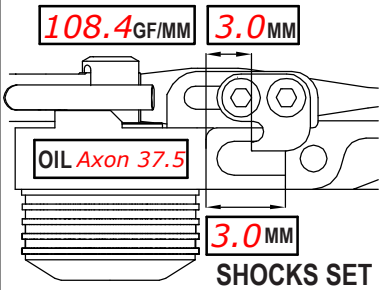

SHOCKS SET

CAMBER ANGLE / °	2	ROTOR	STD ☑
CASTER ANGLE / °	0	SPRING	STD ☑ S ☐
TOE ANGLE / °	2.25	DAMPER	D2.2 ☑
RIDE HEIGHT / MM	5.4	SRS/RHS ARR.	I ☑ II ☐
DOWNSTOP / MM	4.6	PSS SETUP	MM A ☐ B ☐
UPWNSTOP / MM			
STABILIZER Ø / MM	1.1		
LOW ARM C04M1+0.5 ☐	+8.0 ☑		
STEER. ARM AM23 ☑	☐		
WHEEL SPACER / MM			

REAR DRIVE: GB2B ☐ LOW ☐ HIGH ☑
DIFF. OIL 5K | DIFF WASHERS Normal
DOGBONE DRIVE: EVD ☐ WHEELHUB: AM06WL ☑ ☐

FRAME FLEX SETTING

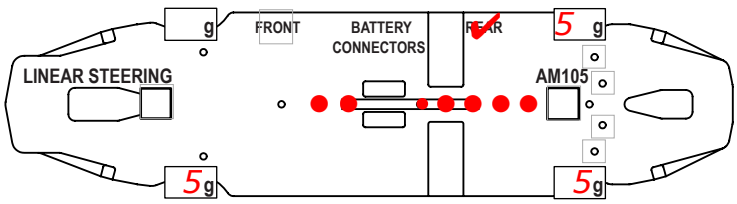

LOWER DECK: C01B-X-MM ☐ C01B-A-MM ☐ C01B-AH-MM ☐
SHIM UNDER AM105 _____ ST55 ☐
ST105/ST110: DOWN/SOFT ☑ UP/STIFF ☐
MOTOR MOUNT AM77MM

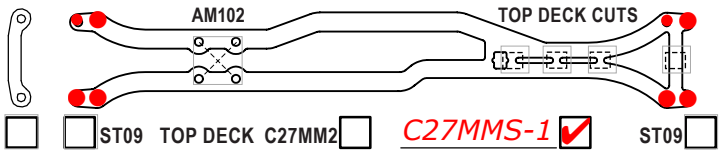

☐ ☐ ST09 TOP DECK C27MM2 ☐ C27MMS-1 ☑ ST09 ☐

TIRES	Volante R36 ETS		
INSERTS			
WHEELS			
ADDITIVE	MR33 V3	TIME - FR 25	RR 25

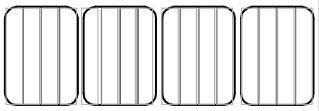

NOTES

MOTOR LATERAL SHIFT / MM		ACKERMANN SHIMS / MM	1
MOTOR	MM 13.5T ETS	SERVO	Power HD
SPUR 100 PINION 42 RATIO		STEER TRAVEL IN 25 OUT	
BODY	PF Type-S LW	BATTERY	LRP 8000 G3
WING	Std	RECEIVER	Futaba
ESC	MM ETS	RADIO	Futaba
ESC SETTING			
BEST LAPTIME 21.1		QUALIF./FINAL POSITION 2	/ 2,2,1

COMMENTS

IFJ/IRJ Used
AT15 Used
In front of motormount ST110 and behind 2X ST105
SB3x5AL Alloy screws used on top

www.petitrc.com