AWESOMATIX A800X

SETUP SHEET
M. Mächler / Arn0
PetitRC.com

NAME	Max Mächler (A800X MMCX)	DATE	12-15.07.2018
COUNTRY	Slovakia	TEMP. °C AIR / TRACK	27°C / 45°C
RACE	ETS Rnd.6		
TRACK	HUDY Arena		

	ASPHALT ☑	(OUTDOOR ☐	INDOOR ☐)	CARPET ☐
TRACK CONDITION	TECHNICAL ☑		MIXED ☑	FAST ☐
TRACTION	LOW ☐		MEDIUM ☑	HIGH ☐

FRONT

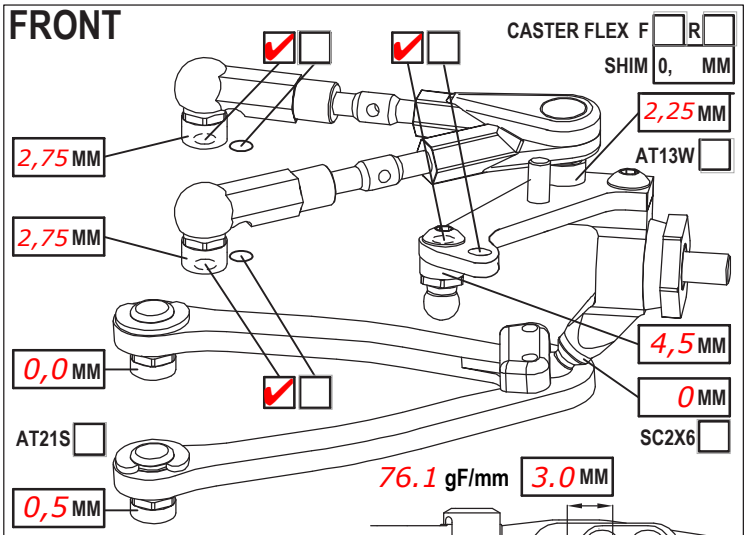

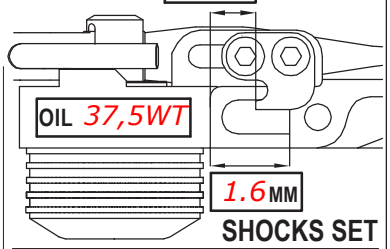

CAMBER ANGLE / °	2.0				
CASTER ANGLE / °	4				
TOE ANGLE / °	0,5 per side				
RIDE HEIGHT / MM	5.2				
DOWNSTOP / MM	6.1				
UPWNSTOP / MM	-				
STABILIZER Ø / MM	1.0				
LOW ARM	C04M1 ☐	+1,5 ☑			
STEER. ARM	AM14A ☐	LS ☑			
WHEEL SPACER / MM	0,5				
FRONT DRIVE	GD3 ☐	SPOOL ☑	GB2B ☐	LOW ☐	HIGH ☑
DIFF. OIL		DIFF WASHERS			
DOGBONE DRIVE	ST17 ☐	ST11 ☐	ST12 ☐	BB ☐	ST02 ☐
WHEELHUB	AM06WL ☑	AM06S-M ☐	AM06W ☐		

SHOCKS SET

ROTOR	STD ☑			
SPRING	STD ☐		S ☑	
DAMPER	D2.2 ☑			
ACTION	SYM. ☐		ASYM. ☐	
SRS/RHS ARR.	I ☑		II ☐	

REAR

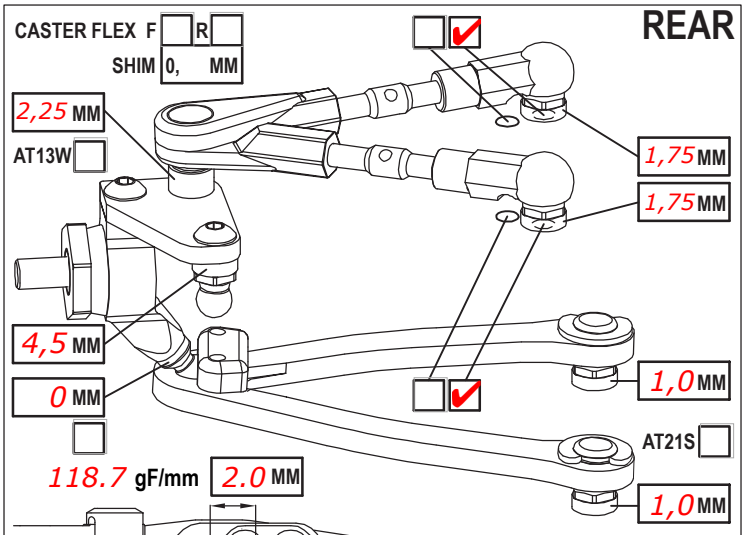

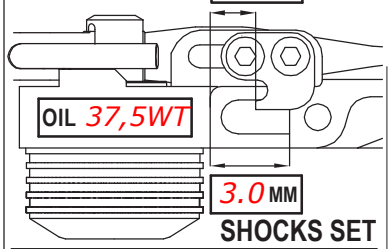

CAMBER ANGLE / °	2.0				
CASTER ANGLE / °	0				
TOE ANGLE / °	2.25				
RIDE HEIGHT / MM	5.4				
DOWNSTOP / MM	4.7				
UPWNSTOP / MM	-				
STABILIZER Ø / MM	1.1				
LOW ARM	C04M1 ☑				
STEER. ARM	AM23 ☑				
WHEEL SPACER / MM	0				
REAR DRIVE	GD3R ☐	GB2B ☑	LOW ☐	HIGH ☑	
DIFF. OIL	10.000	DIFF WASHERS	Small Shim (SH5X7X0.3)		
DOGBONE DRIVE	ST11 ☐	ST12 ☐	BB ☐	ST17 ☐	EVD ☐
WHEELHUB	AM06WL ☑	AM06S-M ☐	AM06W ☐		

SHOCKS SET

ROTOR	STD ☑			
SPRING	STD ☑		S ☐	
DAMPER	D2.2 ☑			
ACTION	SYM. ☐		ASYM. ☐	
SRS/RHS ARR.	I ☑		II ☐	

FRAME FLEX SETTING

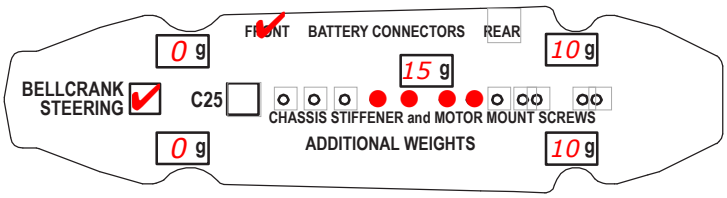

LOWER DECK C01B-X-MM

CHASSIS STIFFENER AM110 ☐ AM115 ☐ ST130 ☐ ST165 ☐

☐ C26 ☐ ST55 ☑ ☐ C26 ☑

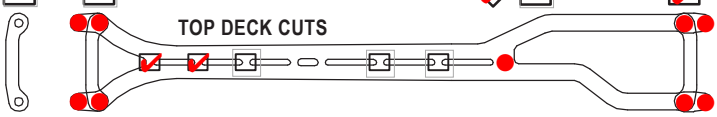

☐ ST09 TOP DECK C27X ☐ VTD ☐ C27MM ☑ ST09 ☐

AM98 STD ☐ CUT ☐ AT63 ☐ AT63 ☐ C38 ☐ AM98 STD ☐ CUT ☐

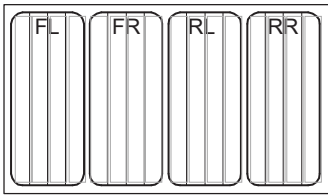

TIRES	FRONT	REAR
BRAND	Volante ETS	
INSERTS		
WHEELS		
ADDITIVE	ETS	

MOTOR LATERAL SHIFT / MM	1,75	ACKERMANN SHIMS / MM	1,0
MOTOR	13,5T ETS	SERVO	MKS HBL575 SL
SPUR 102 PINION 43 RATIO	4.51	STEER TRAVEL IN 25 OUT	
BODY	PF Type-S ProLight	BATTERY	LRP 8000 SS G2
WING	ProLight	RECEIVER	Sanwa RX482
ESC	ETS	RADIO	Sanwa M12S
ESC SETTING	0-Boost / RPM Limiter		
BEST LAPTIME		QUALIF./FINAL POSITION	8 / 6
CONTACT	Max@Awesomatix.com		

COMMENTS

-IFJ / IRJ used / MMCX Conversion Set used
-AM19-4X used in front and rear. 10g on Servo back side. 5g on AM78X1 Bulkhead in rear of Car.
-Used 1x ST105 and 1x ST110 as Battery stop
-Selfmade Turnbuckle stiffener on rear ST110 weight to Flex on rear of chassis more stiff
-Topdeck used in Flex Mode in front
-AT15 used between the bearings in Wheelhub
-AXON Oil in Diff and Dampers.
-Rear springs bent up to 110deg.