AWESOMATIX A800X

SETUP SHEET
M. Mächler / Arn0
PetitRC.com

NAME	Max Mächler	DATE	21-24.06.2018
COUNTRY	Netherlands	TEMP. °C AIR / TRACK	°C / °C
RACE	ETS Rnd.5	ASPHALT ☑ (OUTDOOR ☐ INDOOR ☐)	CARPET ☐
TRACK	AMCA Apeldoorn	TRACK CONDITION TECHNICAL ☐ MIXED ☑	FAST ☐
		TRACTION LOW ☐ MEDIUM ☑	HIGH ☐

FRONT

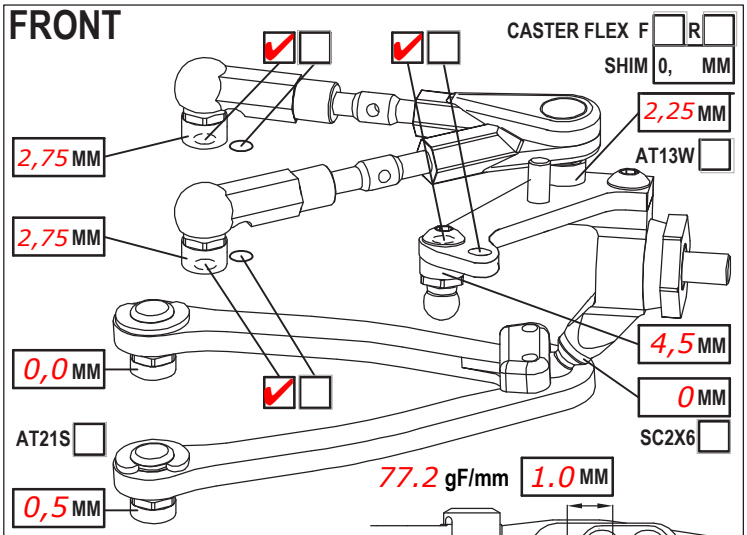

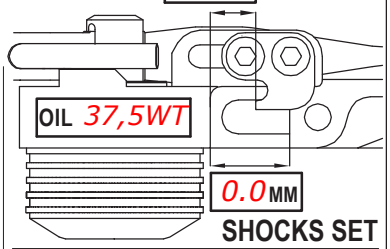

CAMBER ANGLE / °	2.0		
CASTER ANGLE / °	4		
TOE ANGLE / °	0,5 per side		
RIDE HEIGHT / MM	5.2		
DOWNSTOP / MM	6.0		
UPWNSTOP / MM	-		
STABILIZER Ø / MM	1.0		
LOW ARM	C04M1 ☐	+1,5 ☑	
STEER. ARM	AM14A ☐	LS ☑	
WHEEL SPACER / MM	0,5		

SHOCKS SET

ROTOR	STD ☑	☐
SPRING	STD ☐	S ☑
DAMPER	D2.2 ☑	☐
ACTION	SYM. ☐	ASYM. ☐
SRS/RHS ARR.	I ☑	II ☐

FRONT DRIVE	GD3 ☐	SPOOL ☑	GB2B ☐	LOW ☐	HIGH ☑
DIFF. OIL		DIFF WASHERS			
DOGBONE DRIVE	ST17 ☐	ST11 ☐	ST12 ☐	BB ☐	ST02 ☐
WHEELHUB	AM06WL ☑	AM06S-M ☐	AM06W ☐		☐

REAR

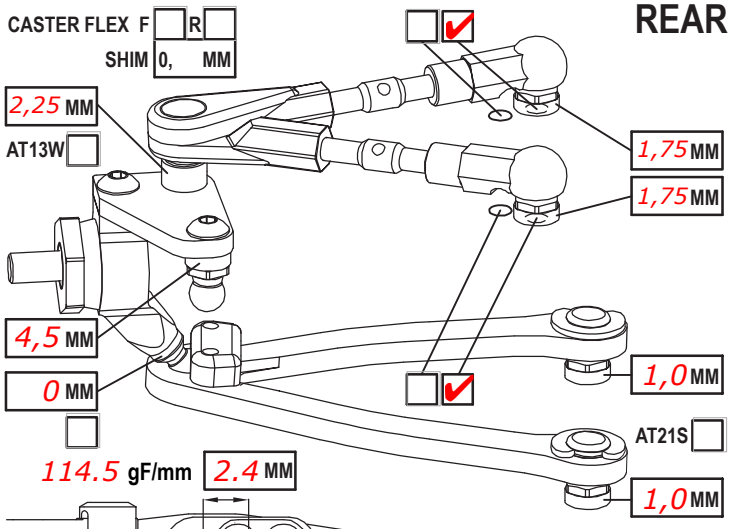

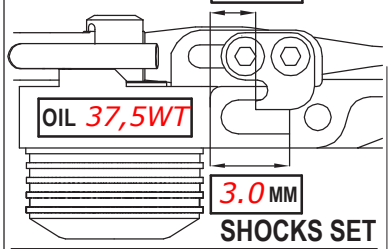

CAMBER ANGLE / °	2.0		
CASTER ANGLE / °	0		
TOE ANGLE / °	1,75		
RIDE HEIGHT / MM	5.4		
DOWNSTOP / MM	4.7		
UPWNSTOP / MM	-		
STABILIZER Ø / MM	1.0		
LOW ARM	C04M1 ☑		
STEER. ARM	AM23 ☑		
WHEEL SPACER / MM	0		

SHOCKS SET

ROTOR	STD ☑	☐
SPRING	STD ☑	S ☐
DAMPER	D2.2 ☑	☐
ACTION	SYM. ☐	ASYM. ☐
SRS/RHS ARR.	I ☑	II ☐

REAR DRIVE	GD3R ☐	GB2B ☑	LOW ☐	HIGH ☑	
DIFF. OIL	7500	DIFF WASHERS	SS		
DOGBONE DRIVE	ST11 ☐	ST12 ☐	BB ☐	ST17 ☐	EVD ☐
WHEELHUB	AM06WL ☑	AM06S-M ☐	AM06W ☐		☐

FRAME FLEX SETTING

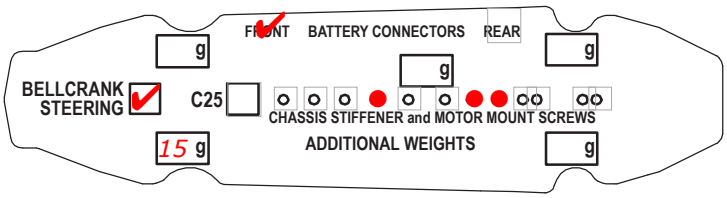

LOWER DECK C01B-X

CHASSIS STIFFENER AM110 ☐ AM115 ☐ ST130 ☑ ST165 ☐

☐ C26 ☐ ST55 ☑ ☐ C26 ☑

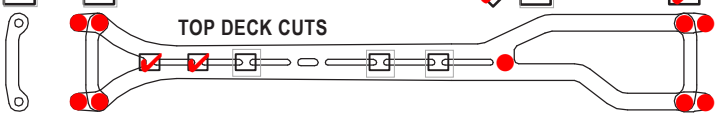

☐ ST09 TOP DECK C27X ☑ VTD ☐ ☐ ST09 ☐

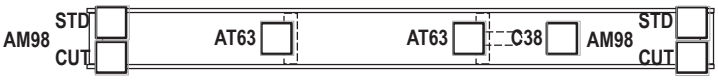

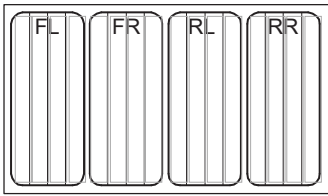

TIRES	FRONT	REAR
BRAND	Volante ETS	
INSERTS		
WHEELS		
ADDITIVE	ETS	

MOTOR LATERAL SHIFT / MM	1,75	ACKERMANN SHIMS / MM	1,0
MOTOR	13,5T ETS	SERVO	MKS HBL575 SL
SPUR 100 PINION 42 RATIO	4.52	STEER TRAVEL IN 25 OUT	
BODY	PF Type-S ProLight	BATTERY	LRP 8000 SS G2
WING	ProLight	RECEIVER	Sanwa RX482
ESC	ETS	RADIO	Sanwa M12S
ESC SETTING	0-Boost / RPM Limiter		
BEST LAPTIME	15.9	QUALIF./FINAL POSITION	2 / 2
CONTACT	Max@Awesomatix.com		

COMMENTS
1J / 1RJ used
AM19-4X used in front and rear
0,5mm shim under ST130
AT15 used between the bearings in Wheelhub
-AXON Oil in Diff and Dampers
-Rear springs bent up to 110deg.
AM77X3 Motormount used
-10g on Servo, 5g between Receiver and ESC, 15g between ESC and Motor