AWESOMATIX A800X

SETUP SHEET
M. Mächler / Arn0
PetitRC.com

NAME	CD	DATE	15.04.2018
COUNTRY	Germany	TEMP. °C AIR / TRACK	18°C / 20 °C
RACE	ETS 2018 Round 3 Spain		
TRACK	Getafe / Madrid		

	ASPHALT ☑	(OUTDOOR ☑	INDOOR ☐)	CARPET ☐
TRACK CONDITION	TECHNICAL ☐	MIXED ☑		FAST ☑
TRACTION	LOW ☑	MEDIUM ☑		HIGH ☐

FRONT

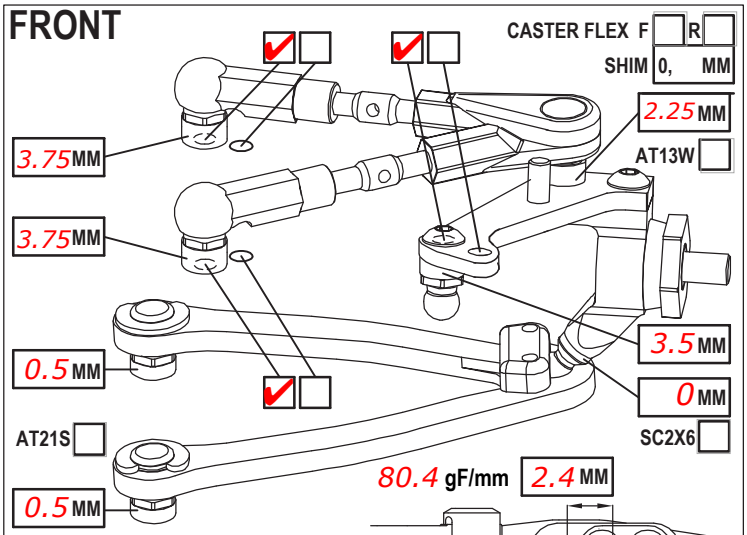

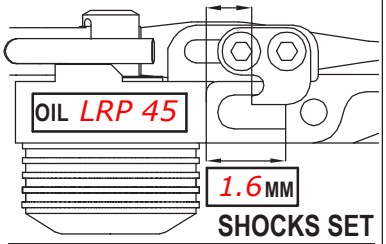

SHOCKS SET

CAMBER ANGLE / °	2.0			
CASTER ANGLE / °	4			
TOE ANGLE / °	1 per side			
RIDE HEIGHT / MM	5.2			
DOWNSTOP / MM	5.8			
UPWNSTOP / MM	-			
STABILIZER Ø / MM	1.0			
LOW ARM	C04M1 ☑	1.5 ☐		
STEER. ARM	AM14A ☐	LS ☑		
WHEEL SPACER / MM	--			
FRONT DRIVE	GD3 ☐	SPOOL ☑	GB2B ☐	LOW ☐ HIGH ☑
DIFF. OIL	DIFF WASHERS			
DOGBONE DRIVE	ST17 ☑	ST11 ☐	ST12 ☐	BB ☑ ST02 ☐
WHEELHUB	AM06WL ☑	AM06S-M ☐	AM06W ☐	

ROTOR	STD ☑		
SPRING	STD ☐	S ☑	
DAMPER	D2.2 ☑		
ACTION	SYM. ☐	ASYM. ☐	
SRS/RHS ARR.	I ☑	II ☐	

REAR

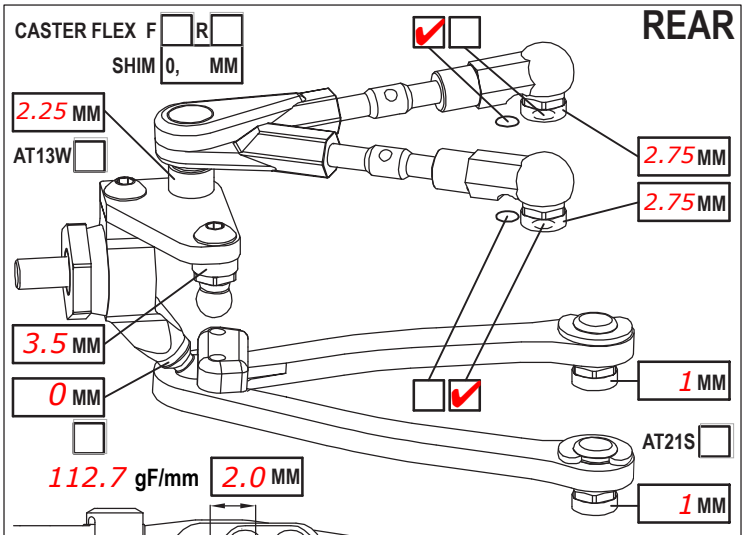

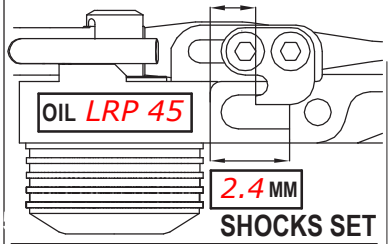

SHOCKS SET

CAMBER ANGLE / °	2			
CASTER ANGLE / °	0			
TOE ANGLE / °	2.5			
RIDE HEIGHT / MM	5.4			
DOWNSTOP / MM	4.6			
UPWNSTOP / MM	-			
STABILIZER Ø / MM	1.1			
LOW ARM	C04M1 ☑	0.5 ☐		
STEER. ARM	AM23 ☑	☐		
WHEEL SPACER / MM	0.5			
REAR DRIVE	GD3R ☐	GB2B ☑	LOW ☐	HIGH ☑
DIFF. OIL	7K	DIFF WASHERS	Std.	
DOGBONE DRIVE	ST11 ☐	ST12 ☐	BB ☑	ST17 ☐ EVD ☐
WHEELHUB	AM06WL ☑	AM06S-M ☐	AM06W ☐	

ROTOR	STD ☑			
SPRING	STD ☑	S ☐		
DAMPER	D2.2 ☑			
ACTION	SYM. ☐	ASYM. ☐		
SRS/RHS ARR.	I ☑	II ☐		
REAR DRIVE	GD3R ☐	GB2B ☑	LOW ☐	HIGH ☑

FRAME FLEX SETTING

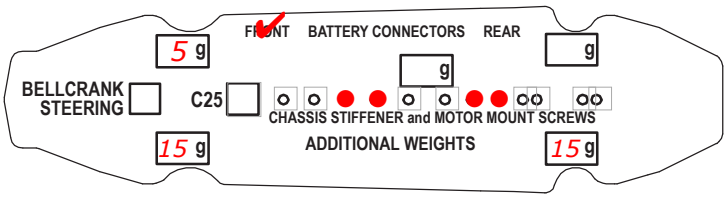

LOWER DECK Carbon

CHASSIS STIFFENER AM110 ☐ AM115 ☐ ST130 ☑ ST165 ☐

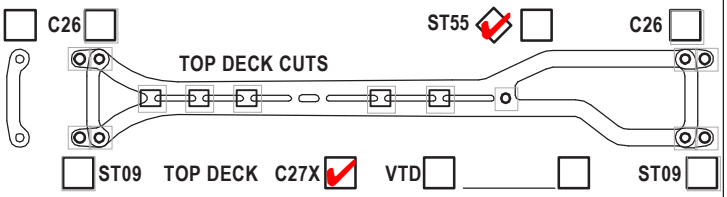

ST09 ☐ TOP DECK C27X ☑ VTD ☐ ☐ ST09 ☐

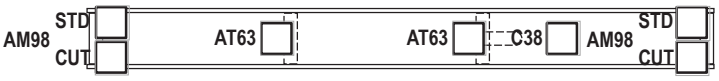

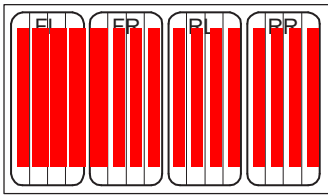

TIRES	FRONT	REAR
BRAND	Volante ETS	
INSERTS	init:cook 80°,flex,break,glue,cut	
WHEELS	prep: heat 60°C 10 min.	
ADDITIVE	MR33 V3	

MOTOR LATERAL SHIFT / MM --	ACKERMANN SHIMS / MM 0.0
MOTOR Muchmore V2 13.5T	SERVO SRT BH8015
SPUR 100 PINION 42 RATIO 4.52	STEER TRAVEL IN 24 OUT 14
BODY Montech Racer light	BATTERY Sunpadow 8400HV
WING standard	RECEIVER Sanwa
ESC new ETS Speedo	RADIO Sanwa M12
ESC SETTING 0-Boost + RPM	
BEST LAPTIME	QUALIF./FINAL POSITION /
CONTACT	

COMMENTS

No PSS
DJCs in the rear for less wheel play
All Balls: AT21
Ballcup brace rear (instead of C26), no C26 front
10g@receiver, 5g@speedo, 5g@servo

Attached stabis inside P12X
Rear Springs not bent = 47.2mm
0.5mm Shim under ST165 middle brace
AM19-4 Upper Arm Holder used in rear
30mm fan between speedo and motor

Hudy Rideheight +.4mm
-> 5.2 real = 5.6 Hudy