AWESOMATIX A800X

SETUP SHEET
M. Mächler / Arn0
PetitRC.com

NAME	Sam Isaacs	DATE	6/10/17
COUNTRY		TEMP. °C AIR / TRACK	85°F / 125-130°F
RACE	JMR Club Race 6/10/17	ASPHALT ☑ (OUTDOOR ☑ INDOOR ☐)	CARPET ☐
TRACK	JMR	TRACK CONDITION: TECHNICAL ☐ MIXED ☑	FAST ☐
		TRACTION: LOW ☐ MEDIUM ☑	HIGH ☐

FRONT

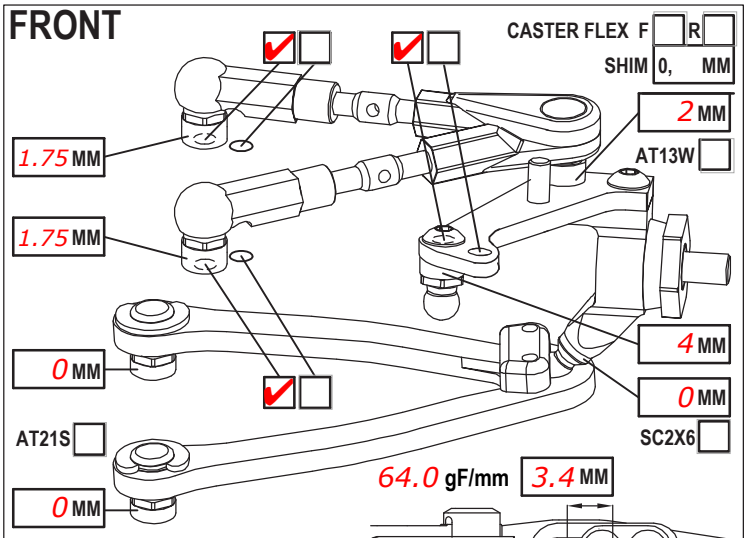

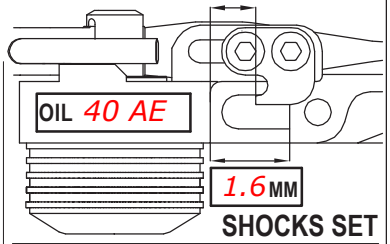

CAMBER ANGLE / °	2 deg		
CASTER ANGLE / °	4		
TOE ANGLE / °	1 out		
RIDE HEIGHT / MM	5.4 MM		
DOWNSTOP / MM	1.75 ORH		
UPWNSTOP / MM			
STABILIZER Ø / MM	1.2		
LOW ARM C04M1 ☐	AL ☑		
STEER. ARM AM14A ☐	LS ☑		
WHEEL SPACER / MM	0		
FRONT DRIVE GD3 ☐	SPOOL ☑	GB2B ☐	LOW ☑ HIGH ☐
DIFF. OIL	DIFF WASHERS		
DOGBONE DRIVE ST17 ☐	ST11 ☑	ST12 ☐	BB ☐ ST02 ☐
WHEELHUB AM06WL ☑	AM06S-M ☐	AM06W ☐	

SHOCKS SET

ROTOR	STD ☑		
SPRING	STD ☑	S ☐	
DAMPER	D2.2 ☑		
ACTION	SYM. ☐	ASYM. ☐	
SRS/RHS ARR.	I ☐	II ☑	

REAR

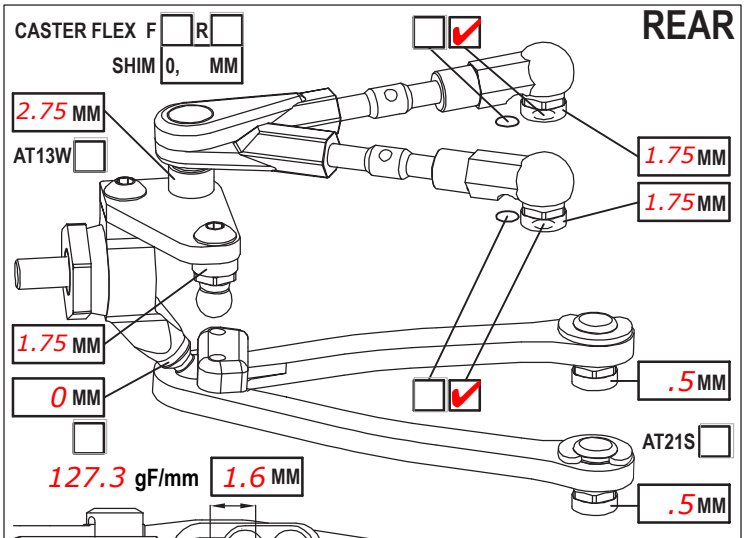

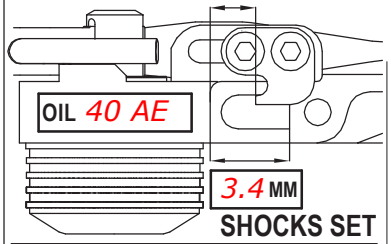

CAMBER ANGLE / °	2 deg		
CASTER ANGLE / °	6 short		
TOE ANGLE / °	2.5 deg		
RIDE HEIGHT / MM	5.6		
DOWNSTOP / MM	2.75 ORH		
UPWNSTOP / MM			
STABILIZER Ø / MM	1.2		
LOW ARM C04M1 ☐	AL ☑		
STEER. ARM AM23 ☑	☐		
WHEEL SPACER / MM	0		
REAR DRIVE GD3R ☐	GB2B ☑	LOW ☐	HIGH ☑
DIFF. OIL 5K	DIFF WASHERS		
DOGBONE DRIVE ST11 ☑	ST12 ☐	BB ☐	ST17 ☐ EVD ☐
WHEELHUB AM06WL ☑	AM06S-M ☐	AM06W ☐	

SHOCKS SET

ROTOR	STD ☑		
SPRING	STD ☑	S ☐	
DAMPER	D2.2 ☑		
ACTION	SYM. ☐	ASYM. ☐	
SRS/RHS ARR.	I ☑	II ☐	

FRAME FLEX SETTING

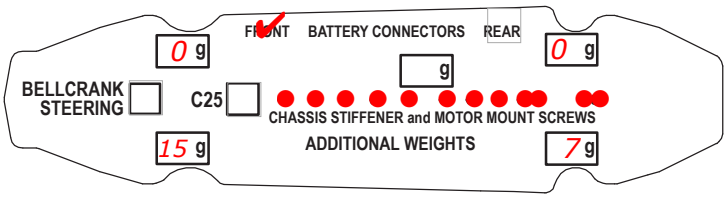

LOWER DECK Carbon 2.25 (X)

CHASSIS STIFFENER AM110 ☐ AM115 ☐ ST130 ☐ ST165 ☑

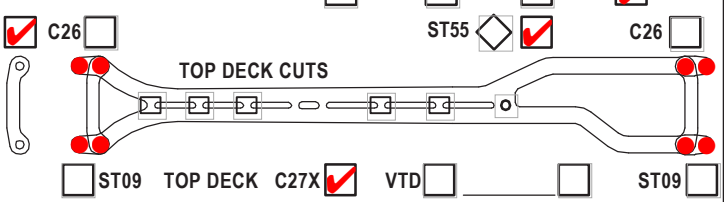

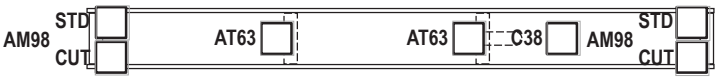

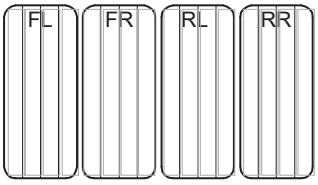

TIRES	FRONT	REAR
BRAND	Team Powers 34	
INSERTS	Full sauce	
WHEELS		
ADDITIVE	FX2	

MOTOR LATERAL SHIFT / MM	0	ACKERMANN SHIMS / MM	0
MOTOR	R1 V16 17.5	SERVO	AMX 701
SPUR 96 PINION 45 RATIO	4.05	STEER TRAVEL IN 28 OUT	
BODY	IS 200 max forward	BATTERY	PCR 8200
WING	montech hard 1mm	RECEIVER	Sanwa
ESC	Flow X	RADIO	Sanwa
ESC SETTING			
BEST LAPTIME	11.6	QUALIF./FINAL POSITION	/
CONTACT			

COMMENTS

note heavy 65g center brace, LS front steering arms DL-A installed on car
Note type 2 front end and different diff height positions
5 grams behind speed control, 7 behind motor, 5 inside receiver
Baked FX2 for 20 min into tires and straight onto track