AWESOMATIX A800X

SETUP SHEET
M. Mächler / Arn0
PetitRC.com

NAME	Sam Isaacs	DATE	6/3/17
COUNTRY		TEMP. °C AIR / TRACK	80°F / 110F
RACE	JMR club race. 6/3/17	ASPHALT ☑ (OUTDOOR ☑ INDOOR ☐)	CARPET ☐
TRACK	JMR	TRACK CONDITION: TECHNICAL ☐ MIXED ☑	FAST ☐
		TRACTION: LOW ☐ MEDIUM ☑	HIGH ☐

FRONT

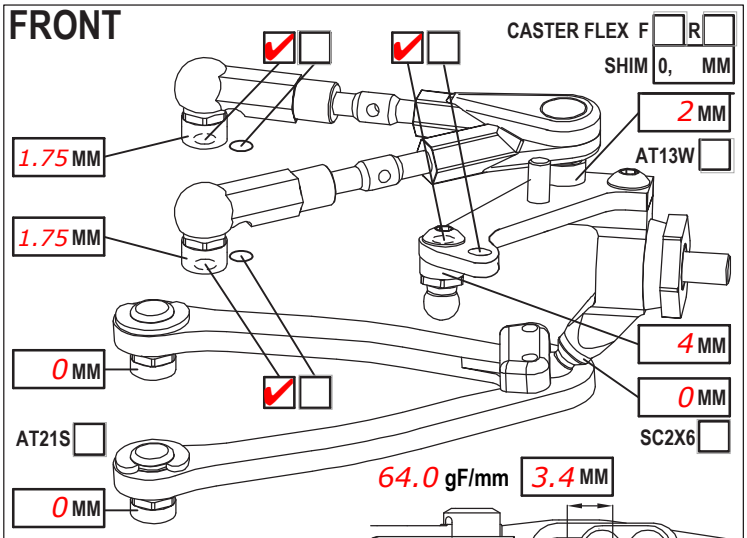

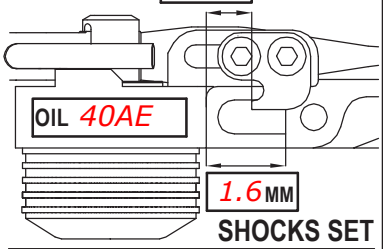

CAMBER ANGLE / °	2		
CASTER ANGLE / °	4		
TOE ANGLE / °	1 out/side		
RIDE HEIGHT / MM	5.5		
DOWNSTOP / MM	2 ORH		
UPWNSTOP / MM			
STABILIZER Ø / MM	1.2		
LOW ARM C04M1 ☐	AL ☑		
STEER. ARM AM14A ☐	LS ☑		
WHEEL SPACER / MM	0		
FRONT DRIVE GD3 ☐	SPOOL ☑	GB2B ☐	LOW ☑ HIGH ☐
DIFF. OIL	DIFF WASHERS		
DOGBONE DRIVE ST17 ☐	ST11 ☑	ST12 ☐	BB ☐ ST02 ☐
WHEELHUB AM06WL ☑	AM06S-M ☐	AM06W ☐	☐

SHOCKS SET

ROTOR	STD ☑		☐
SPRING	STD ☑	S	☐
DAMPER	D2.2 ☑		☐
ACTION	SYM. ☐	ASYM.	☐
SRS/RHS ARR.	I ☐	II	☑

REAR

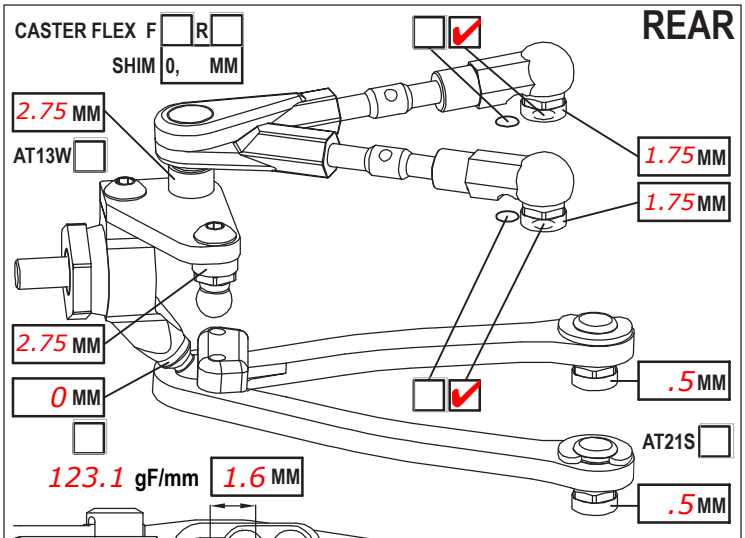

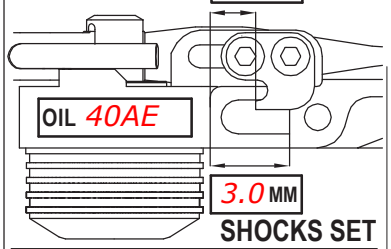

CAMBER ANGLE / °	2		
CASTER ANGLE / °	6 short		
TOE ANGLE / °	2.5		
RIDE HEIGHT / MM	5.6		
DOWNSTOP / MM	2.75-3 ORH		
UPWNSTOP / MM			
STABILIZER Ø / MM	1.2		
LOW ARM C04M1 ☐	AL ☑		
STEER. ARM AM23 ☑	☐		
WHEEL SPACER / MM	0		
REAR DRIVE GD3R ☐	GB2B ☐	LOW ☐	HIGH ☑
DIFF. OIL 5K AE	DIFF WASHERS		
DOGBONE DRIVE ST11 ☑	ST12 ☐	BB ☐	ST17 ☐ EVD ☐
WHEELHUB AM06WL ☑	AM06S-M ☐	AM06W ☐	☐

SHOCKS SET

ROTOR	STD ☑		☐
SPRING	STD ☑	S	☐
DAMPER	D2.2 ☑		☐
ACTION	SYM. ☐	ASYM.	☐
SRS/RHS ARR.	I ☑	II	☐

FRAME FLEX SETTING

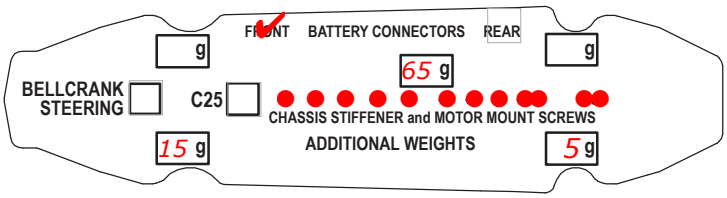

LOWER DECK X 2.25 carbon

CHASSIS STIFFENER AM110 ☐ AM115 ☐ ST130 ☐ ST165 ☑

☑ C26 ☐ ST55 ☑ C26 ☐

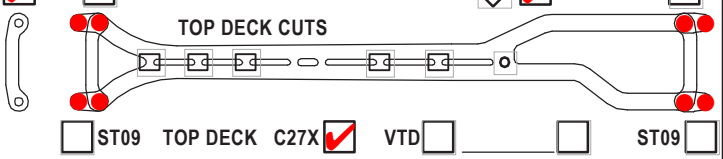

☐ ST09 TOP DECK C27X ☑ VTD ☐ ☐ ST09 ☐

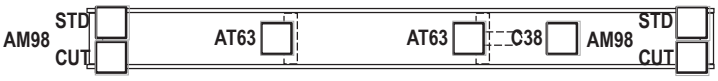

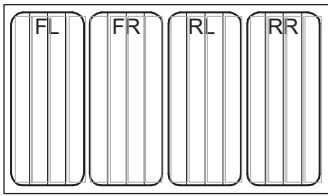

TIRES	FRONT	REAR
BRAND	Team Powers 34	
INSERTS		
WHEELS	full sauce	
ADDITIVE	FX 2 15-20 min	

MOTOR LATERAL SHIFT / MM 0	ACKERMANN SHIMS / MM 0
MOTOR TSR 17.5/R1 V16	SERVO AMX 701L
SPUR 96 PINION 45 RATIO 4.05	STEER TRAVEL IN 28 OUT
BODY IS-200 max forward	BATTERY PCR 8200
WING Montech hard 1mm	RECEIVER Sanwa
ESC Flow X	RADIO Sanwa
ESC SETTING LRP Flow X	
BEST LAPTIME 9.9 practice, 10.0 racing	QUALIF./FINAL POSITION /
CONTACT	

COMMENTS

Mugen FP servo horn
wipe tires completely dry before run
full chassis screws, no topdeck cuts, heavy 65g center brace
LS1 rack with LS arms
note type 2 front suspention 7 grams behind motor, 5 behind speed control, 5 inside receiver down center of chassis
(total weight 1360-1365g)