AWESOMATIX A800X

SETUP SHEET
M. Mächler / Arn0
PetitRC.com

NAME	Mitchell van Es	DATE	30-04-17
COUNTRY	the Netherlands	TEMP. °C AIR / TRACK	°C / 18°C
RACE	Dutch Nationals round 1	ASPHALT ☑ (OUTDOOR ☐ INDOOR ☐)	CARPET ☐
TRACK	HFCC Den Haag	TRACK CONDITION TECHNICAL ☑ MIXED ☐	FAST ☐
		TRACTION LOW ☑ MEDIUM ☐	HIGH ☐

FRONT

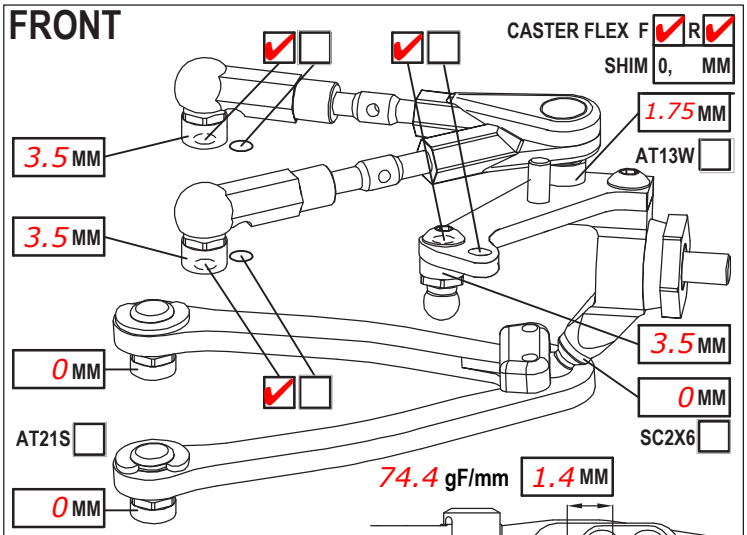

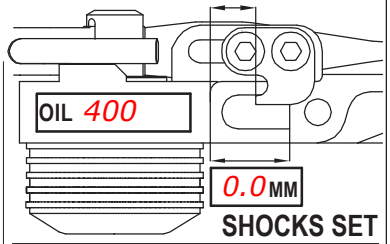

CAMBER ANGLE / °	-1°		
CASTER ANGLE / °	4°		
TOE ANGLE / °	0.5° out		
RIDE HEIGHT / MM	5.4 mm		
DOWNSTOP / MM	6.0 mm		
UPWNSTOP / MM			
STABILIZER Ø / MM	1.0 mm		
LOW ARM	C04M1 ☑	☐	
STEER. ARM	AM14A ☑	☐	
WHEEL SPACER / MM			

SHOCKS SET

ROTOR	STD ☑	☐
SPRING	STD ☐	S ☑
DAMPER	D2.2 ☑	☐
ACTION	SYM. ☑	ASYM. ☐
SRS/RHS ARR.	I ☑	II ☐

FRONT DRIVE	GD3 ☐	SPOOL ☑	GB2B ☐	LOW ☑	HIGH ☐
DIFF. OIL		DIFF WASHERS			
DOGBONE DRIVE	ST17 ☐	ST11 ☑	ST12 ☐	BB ☐	ST02 ☐
WHEELHUB	AM06WL ☑	AM06S-M ☐	AM06W ☐		☐

REAR

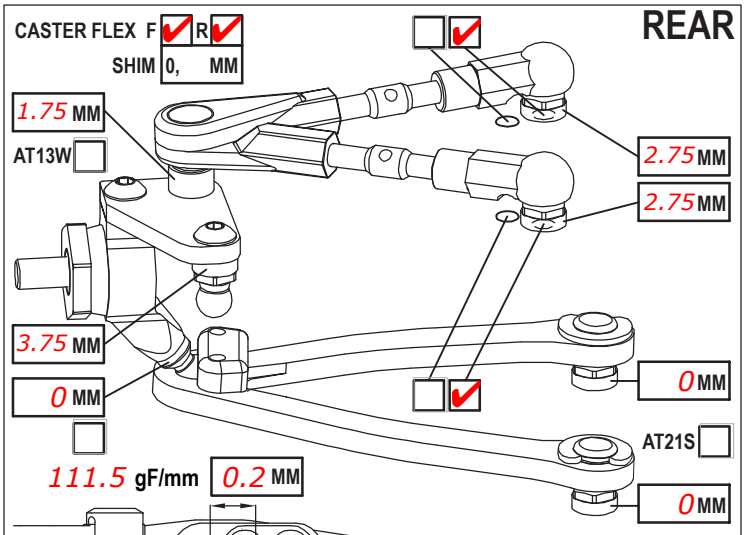

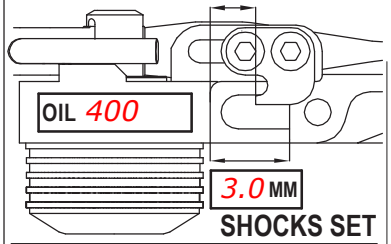

CAMBER ANGLE / °	-1°		
CASTER ANGLE / °	4° short		
TOE ANGLE / °	2.5°		
RIDE HEIGHT / MM	5.8 mm		
DOWNSTOP / MM	4.6 mm		
UPWNSTOP / MM			
STABILIZER Ø / MM	1.0 mm		
LOW ARM	C04M1 ☑	☐	
STEER. ARM	AM23 ☑	☐	
WHEEL SPACER / MM			

SHOCKS SET

ROTOR	STD ☑	☐
SPRING	STD ☐	S ☑
DAMPER	D2.2 ☑	☐
ACTION	SYM. ☑	ASYM. ☐
SRS/RHS ARR.	I ☑	II ☐

REAR DRIVE	GD3R ☐	GB2B ☑	LOW ☑	HIGH ☐	
DIFF. OIL	5000	DIFF WASHERS	std		
DOGBONE DRIVE	ST11 ☑	ST12 ☐	BB ☐	ST17 ☐	EVD ☐
WHEELHUB	AM06WL ☑	AM06S-M ☐	AM06W ☐		☐

FRAME FLEX SETTING

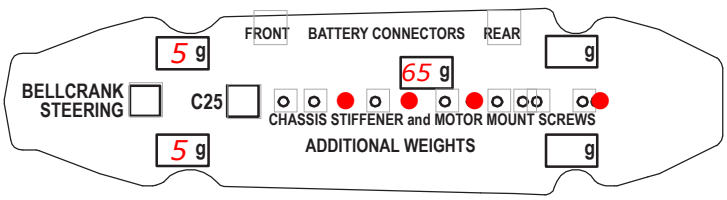

LOWER DECK

CHASSIS STIFFENER AM110 ☐ AM115 ☐ ST130 ☐ ST165 ☑

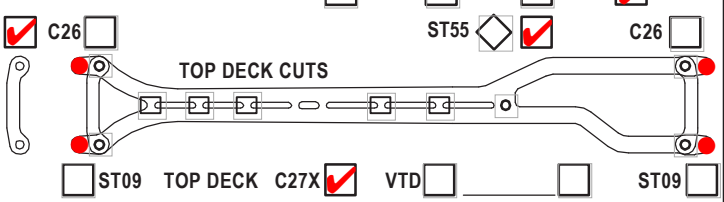

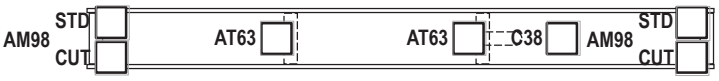

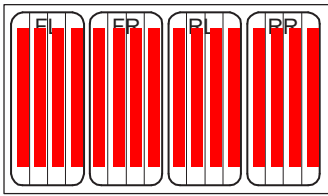

TIRES	FRONT	REAR
BRAND	Volante 36R	
INSERTS		
WHEELS		
ADDITIVE	Hudy	

MOTOR LATERAL SHIFT / MM		ACKERMANN SHIMS / MM	0 mm
MOTOR	LRP X20 5.5t	SERVO	Power HD
SPUR	PINION 1 RATIO 0.00	STEER TRAVEL IN	OUT
BODY	LTC	BATTERY	LRP 5600
WING	std	RECEIVER	Futaba
ESC	LRP Flow X	RADIO	Futaba
ESC SETTING			
BEST LAPTIME	17.124	QUALIF./FINAL POSITION	2 / 2
CONTACT			

COMMENTS

The track at which the race was held was very technical and had extremely low traction, it also featured multiple off-camber corners. Nevertheless, this setup made for a very well balanced, predictable and consistent car.