AWESOMATIX A800MMX

SETUP SHEET

NAME	Chris Grainger	DATE	18-20/11/22
COUNTRY	Uk	TEMP. °C AIR / TRACK	/
RACE	Ews international	TRACK CONDITION	ASPHALT ☐ OUTDOOR ☐ INDOOR ☑ CARPET ☑ TECHNICAL ☐ MIXED ☑ FAST ☐
TRACK	Ews	TRACTION	LOW ☐ MEDIUM ☑ HIGH ☐

FRONT

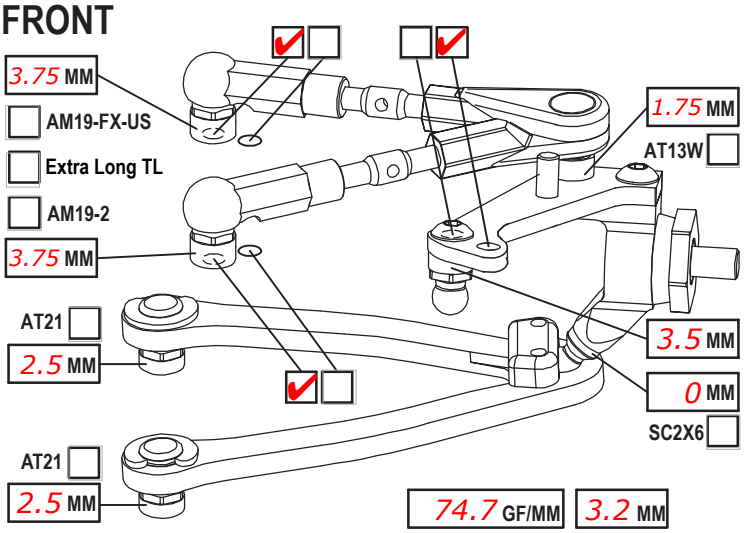

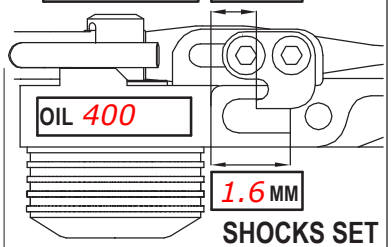

CAMBER ANGLE / °	-2
CASTER ANGLE / °	4
TOE ANGLE / °	+1
RIDE HEIGHT / MM	5
DOWNSTOP / MM	5. 4
UPWNSTOP / MM	
STABILIZER Ø / MM	1.2
LOW ARM C04M1+9.0	☑ ☐
STEER. ARM AM14LS	☐ ☐
WHEEL SPACER / MM	0
FRONT DRIVE	SPOOL ☑ GB2B ☐
DIFF. OIL	DIFF WASHERS

SHOCKS SET

ROTOR	STD ☑			☐
SPRING	STD ☐		S	☑
DAMPER	D2.2 ☑			☐
SRS/RHS ARR.	I ☑		II	☐
PSS SETUP	25% ☐		15%	☐
		LOW	☑	HIGH ☐
WHEELHUB	AM06WL ☑			☐

REAR

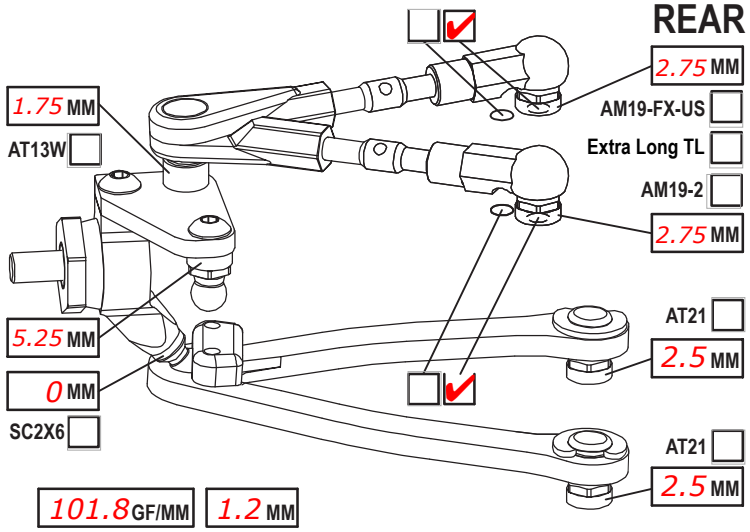

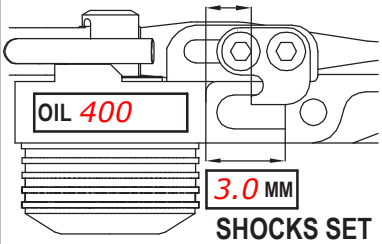

CAMBER ANGLE / °	-2
CASTER ANGLE / °	-2
TOE ANGLE / °	3.0
RIDE HEIGHT / MM	5.2
DOWNSTOP / MM	4.4
UPWNSTOP / MM	
STABILIZER Ø / MM	1.1
LOW ARM C04M1+8.0	☐ ☐
STEER. ARM AM23-1	☑ ☐
WHEEL SPACER / MM	
REAR DRIVE	GB2B ☑ LOW ☑ HIGH ☐
DIFF. OIL 10k	DIFF WASHERS SH5x7x0.4

SHOCKS SET

ROTOR	STD ☑			☐
SPRING	STD ☐		S	☑
DAMPER	D2.2 ☑			☐
SRS/RHS ARR.	I ☑		II	☐
PSS SETUP	25% ☐		15%	☐
		LOW	☑	HIGH ☐
WHEELHUB	AM06WL ☑			☐

CHASSIS FLEX AND WEIGHT SETTINGS

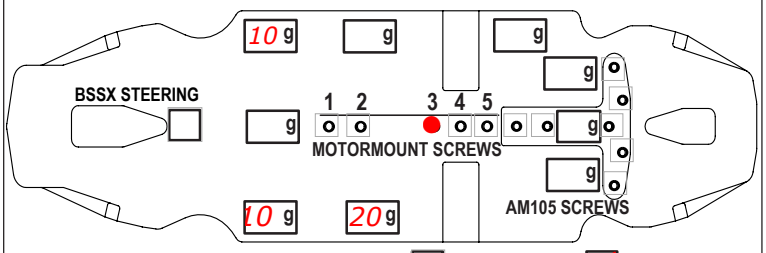

LOWER DECK C01B-X-MM2 ☐ C01B-X-MMA ☑

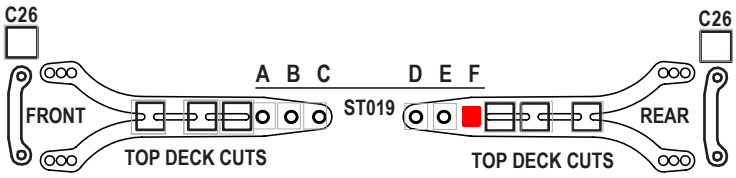

FRONT TOP DECK C127 ☐ C127S ☐ REAR TOP DECK C127 ☐ C127S ☐

TIRES	Rush		
INSERTS			
WHEELS			
ADDITIVE	Mr33	TIME - FR 10	RR 10
TOTAL WEIGHT	1305	WEIGHT DISTRIBUTION F 49 %	R 51 %
NOTES:			

MOTOR LATERAL SHIFT / MM 0	ACKERMANN POSITION Back
MOTOR Reedy M4 5.0T	SERVO Reedy
SPUR 80 PINION 21 RATIO 7.24	STEER TRAVEL IN 28.5 OUT See
BODY Speciale UL	BATTERY Reedy 4100
WING Speciale L	RECEIVER Sanwa
ESC Reedy 510R	RADIO Sanwa
ESC SETTING	
BEST LAPTIME 14.3	QUALIF./FINAL POSITION 11 / 11

BDL
AT-15
BAS
BW-7
BW-8
AT-139
Bw-52
15g under speedo
HRB
C127mmx