AWESOMATIX A800MMX

SETUP SHEET

NAME	Brad Johnson
COUNTRY	USA
RACE	Sydor Invitational
TRACK	Prolevel - St. Louis

DATE 04-02-22 TEMP. °C AIR / TRACK 71 /

	ASPHALT ☐	OUTDOOR ☐	INDOOR ☑	CARPET ☑
TRACK CONDITION	TECHNICAL ☐		MIXED ☑	FAST ☑
TRACTION	LOW ☐		MEDIUM ☑	HIGH ☑

FRONT

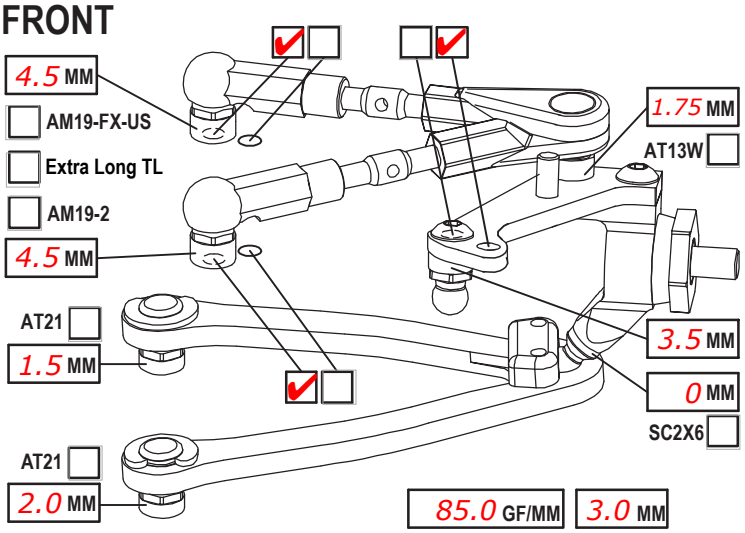

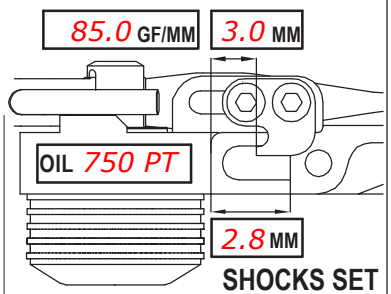

SHOCKS SET

CAMBER ANGLE / °	1.5
CASTER ANGLE / °	4
TOE ANGLE / °	.5 out
RIDE HEIGHT / MM	5.2
DOWNSTOP / MM	6.0
UPWNSTOP / MM	NA
STABILIZER Ø / MM	1.0
LOW ARM C04M1+9.0 ☑ ☐	
STEER. ARM AM14LS ☐ AVID ☑	
WHEEL SPACER / MM	0
FRONT DRIVE SPOOL ☑ GB2B ☐	
DIFF. OIL NA	DIFF WASHERS NA

ROTOR	STD ☑		☐
SPRING	STD ☐	S	☑
DAMPER	D2.2 ☑		☐
SRS/RHS ARR.	I ☑	II	☐
PSS SETUP	25% ☐	15%	☐
	LOW ☑	HIGH	☐

WHEELHUB AM06WL ☑ ☐

REAR

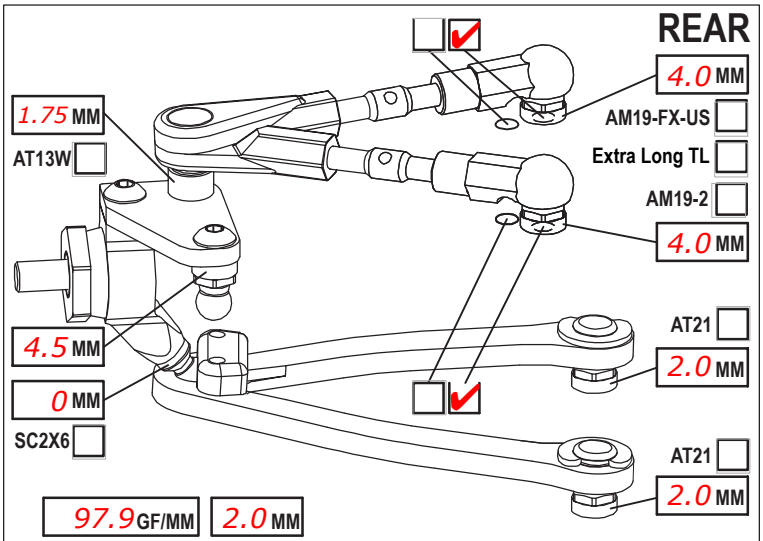

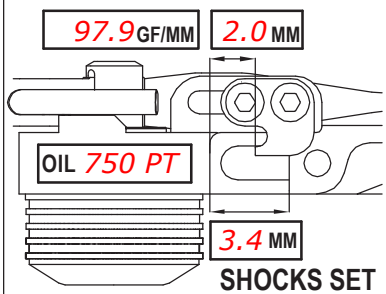

SHOCKS SET

CAMBER ANGLE / °	1.5
CASTER ANGLE / °	2 short
TOE ANGLE / °	2.5
RIDE HEIGHT / MM	5.4
DOWNSTOP / MM	5.4
UPWNSTOP / MM	NA
STABILIZER Ø / MM	1.1
LOW ARM C04M1+8.0 ☑ ☐	
STEER. ARM AM23-1 ☑ ☐	
WHEEL SPACER / MM	
REAR DRIVE GB2B ☐	
DIFF. OIL 7K - 240	DIFF WASHERS Small

ROTOR	STD ☑		☐
SPRING	STD ☐	S	☑
DAMPER	D2.2 ☑		☐
SRS/RHS ARR.	I ☑	II	☐
PSS SETUP	25% ☐	15%	☐
	LOW ☑	HIGH	☐

WHEELHUB AM06WL ☑ ☐

CHASSIS FLEX AND WEIGHT SETTINGS

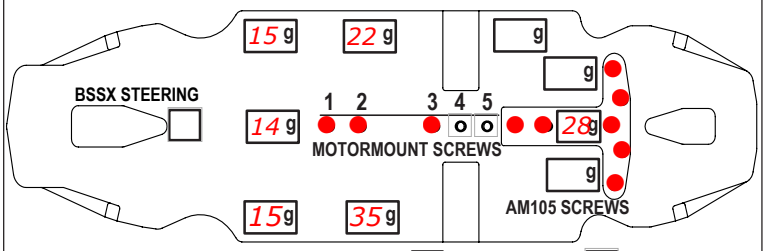

LOWER DECK C01B-X-MM2 ☑ C01B-X-MMA ☐

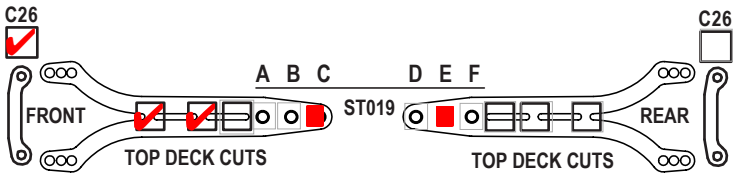

FRONT TOP DECK C127 ☐ C127S ☑ REAR TOP DECK C127 ☐ C127S ☑

TIRES	Old Gravity
INSERTS	New Gravity
WHEELS	New Gravity
ADDITIVE	SXT 3.0

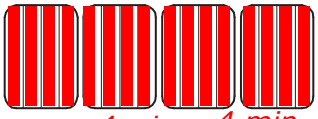

TIME - FR 4 min RR 4 min

TOTAL WEIGHT 1320 WEIGHT DISTRIBUTION F 50 % R 50 %

NOTES:

MOTOR LATERAL SHIFT / MM	
MOTOR	R1 V21s 21.5
SPUR 96 PINION 50 RATIO	3.65
BODY	Wolverine ULW .5
WING	Racer .75
ESC	R1 Super Stock
ESC SETTING	
BEST LAPTIME	9.8

ACKERMANN POSITION	Back
SERVO	Sanwa PGS LH II
STEER TRAVEL IN	23 OUT 17
BATTERY	Sunpadow 5500
RECEIVER	Sanwa 493
RADIO	Sanwa M17
QUALIF./FINAL POSITION	1 / 1

ADC, BDL, LFA Pulleys, Low Friction Belts
HRB Full Up, Shimmed up 2.0mm
BW7, BW8, BW22 Front Battery Holder
Wolverine mounted 24mm forward with BS Works HRB Jig