AWESOMATIX A800MMX

SETUP SHEET

NAME	Brad Johnson	DATE 03-13-22	TEMP. °C AIR / TRACK 71 /
COUNTRY	USA		
RACE	Motiv Final Race		
TRACK	HobbyTown - Osh Kosh WI		

	ASPHALT ☐	OUTDOOR ☐	INDOOR ☑	CARPET ☑
TRACK CONDITION	TECHNICAL ☑		MIXED ☑	FAST ☐
TRACTION	LOW ☐		MEDIUM ☑	HIGH ☐

FRONT

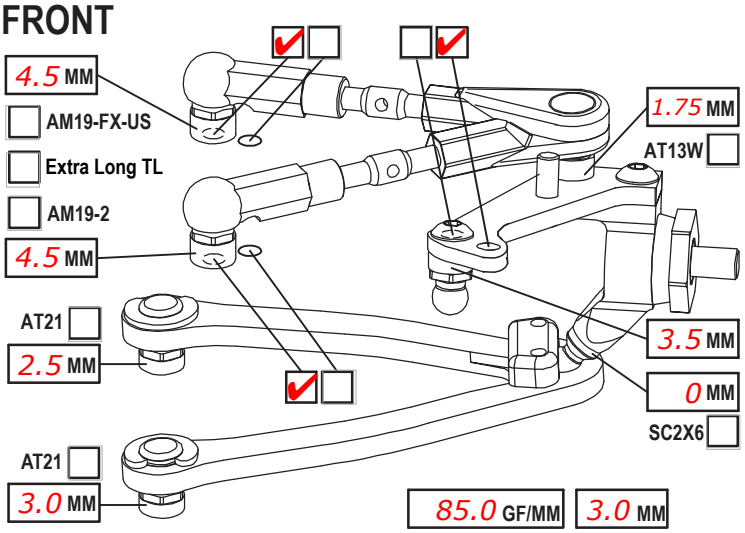

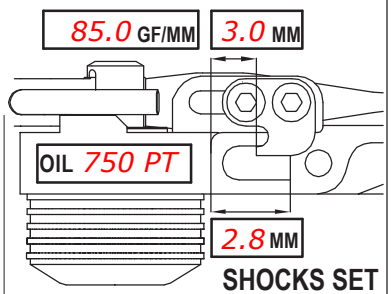

SHOCKS SET

CAMBER ANGLE / °	2.0	ROTOR STD ☑	
CASTER ANGLE / °	4	SPRING STD ☐	S ☑
TOE ANGLE / °	.5 out	DAMPER D2.2 ☑	
RIDE HEIGHT / MM	5.2	SRS/RHS ARR. I ☑	II ☐
DOWNSTOP / MM	6.0	PSS SETUP 25% ☐	15% ☐
UPWNSTOP / MM	NA		
STABILIZER Ø / MM	1.0		
LOW ARM C04M1+9.0 ☑	☐		
STEER. ARM AM14LS ☐	AVID ☑		
WHEEL SPACER / MM	0		
FRONT DRIVE SPOOL ☑	GB2B ☐	LOW ☑	HIGH ☐
DIFF. OIL NA	DIFF WASHERS NA		
		WHEELHUB AM06WL ☑	☐

REAR

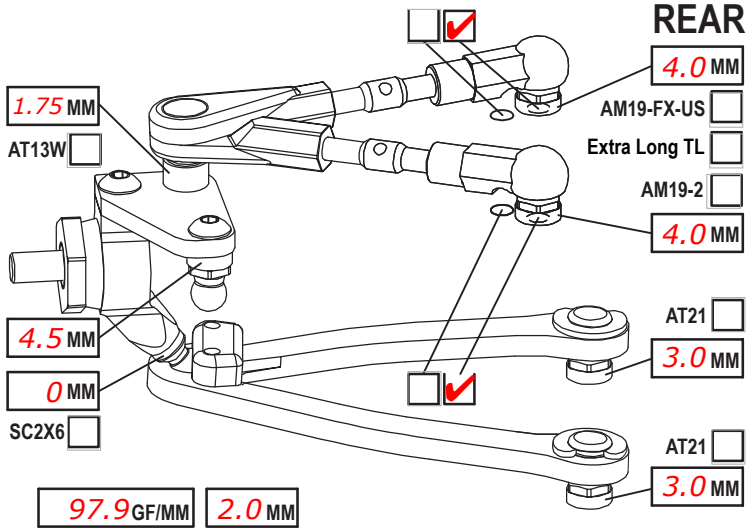

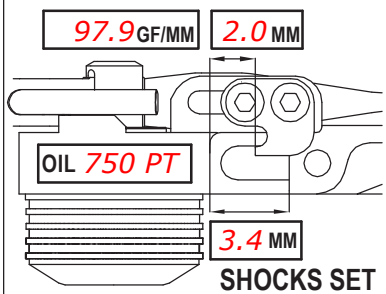

SHOCKS SET

CAMBER ANGLE / °	2.0	ROTOR STD ☑	
CASTER ANGLE / °	2 short	SPRING STD ☐	S ☑
TOE ANGLE / °	2.5	DAMPER D2.2 ☑	
RIDE HEIGHT / MM	5.4	SRS/RHS ARR. I ☑	II ☐
DOWNSTOP / MM	5.4	PSS SETUP 25% ☐	15% ☐
UPWNSTOP / MM	NA		
STABILIZER Ø / MM	1.1		
LOW ARM C04M1+8.0 ☑	☐		
STEER. ARM AM23-1 ☑	☐		
WHEEL SPACER / MM			
REAR DRIVE	GB2B ☐	LOW ☐	HIGH ☑
DIFF. OIL 7K - 240	DIFF WASHERS Small		
		WHEELHUB AM06WL ☑	☐

CHASSIS FLEX AND WEIGHT SETTINGS

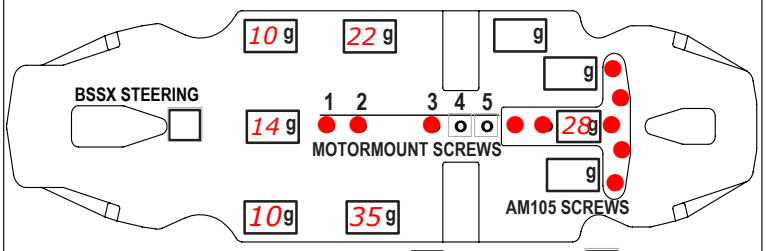

LOWER DECK C01B-X-MM2 ☑ C01B-X-MMA ☐

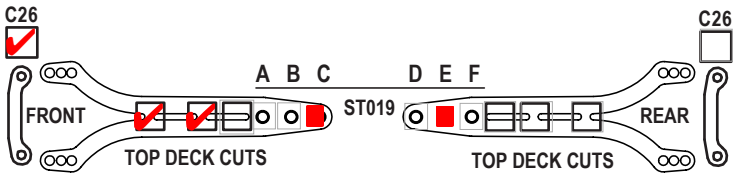

FRONT TOP DECK C127 ☐ C127S ☑ REAR TOP DECK C127 ☐ C127S ☑

TIRES	Gravity		
INSERTS	Gravity		
WHEELS	Gravity		
ADDITIVE	SXT 3.0	TIME - FR 4 min	RR 4 min
TOTAL WEIGHT 1335	WEIGHT DISTRIBUTION F 50 %	R 50 %	
NOTES:			

MOTOR LATERAL SHIFT / MM	ACKERMANN POSITION Back
MOTOR R1 V21s 21.5	SERVO Sanwa PGS LH II
SPUR 96 PINION 45 RATIO 4.05	STEER TRAVEL IN 23 OUT 17
BODY Wolverine ULW .5	BATTERY Sunpadow 5500
WING Racer .75	RECEIVER Sanwa 493
ESC Tekin RS Pro Black	RADIO Sanwa M17
ESC SETTING	
BEST LAPTIME 8.7	QUALIF./FINAL POSITION 2 / 1

ADC, BDL, LFA Pulleys, Low Friction Belts
HRB Full Up, Shimmed up 2.0mm
BW7, BW8, BW22 Front Battery Holder
Wolverine mounted 24mm forward with BS Works HRB Jig