AWESOMATIX A800MMX

SETUP SHEET

NAME	Marc Rheinard	DATE 6.3.2022	TEMP. °C AIR / TRACK /
COUNTRY		TRACK CONDITION	ASPHALT ☐ OUTDOOR ☐ INDOOR ☑ CARPET ☑
RACE	GP3F Longwy		TECHNICAL ☐ MIXED ☐ FAST ☑
TRACK		TRACTION	LOW ☐ MEDIUM ☑ HIGH ☐

FRONT

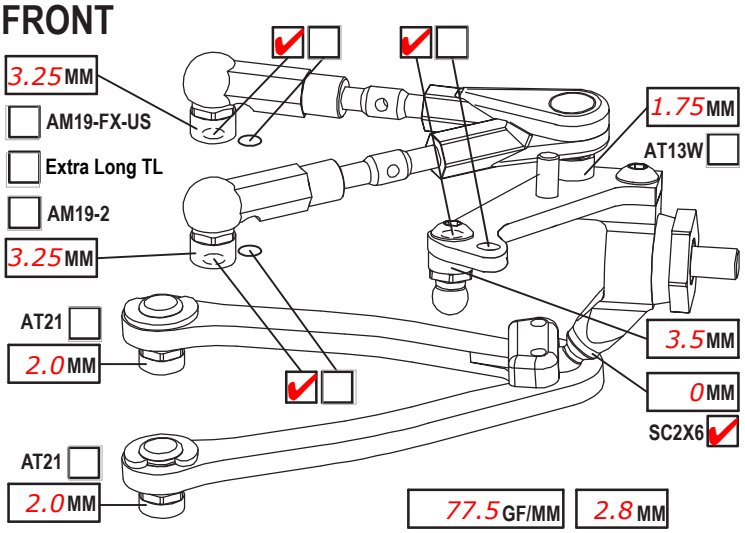

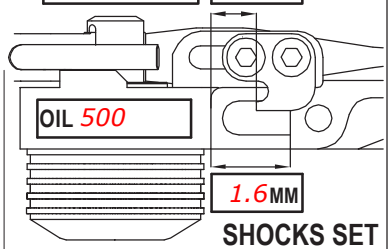

SHOCKS SET

CAMBER ANGLE / °	1.5	ROTOR	STD ☑ ☐
CASTER ANGLE / °	4.0	SPRING	STD ☐ S ☑
TOE ANGLE / °	1.0	DAMPER	D2.2 ☐ ☐
RIDE HEIGHT / MM	5.0	SRS/RHS ARR.	I ☑ II ☐
DOWNSTOP / MM	5.8	PSS SETUP	25% ☑ 15% ☐
UPWNSTOP / MM			
STABILIZER Ø / MM	1.2		
LOW ARM	C04M1+9.0 ☑ ☐		
STEER. ARM	AM14LS ☐ ☐		
WHEEL SPACER / MM			
FRONT DRIVE	SPOOL ☑ GB2B ☐		LOW ☑ HIGH ☐
DIFF. OIL	DIFF WASHERS		
		WHEELHUB	AM06WL ☑ ☐

REAR

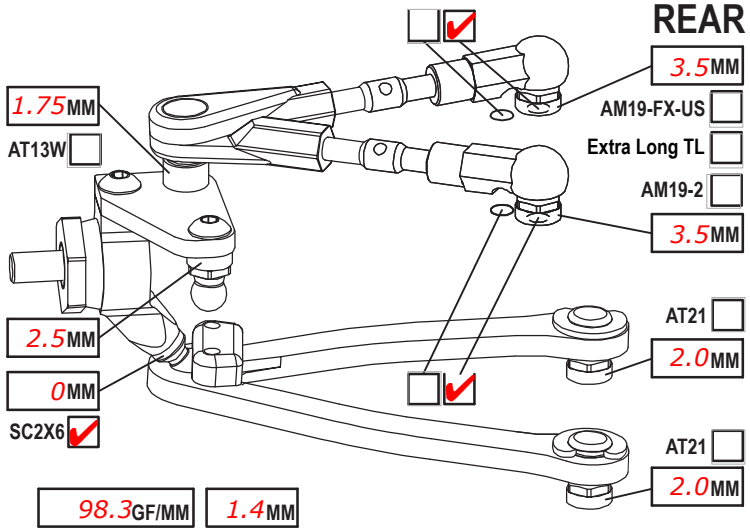

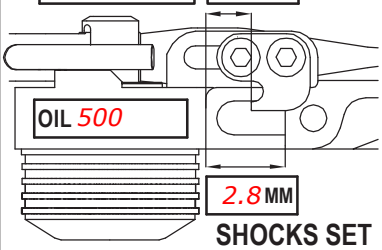

SHOCKS SET

CAMBER ANGLE / °	1.5	ROTOR	STD ☑ ☐
CASTER ANGLE / °	-3.0	SPRING	STD ☐ S ☑
TOE ANGLE / °	2.0	DAMPER	D2.2 ☐ ☐
RIDE HEIGHT / MM	5.2	SRS/RHS ARR.	I ☑ II ☐
DOWNSTOP / MM	4.4	PSS SETUP	25% ☐ 15% ☐
UPWNSTOP / MM			
STABILIZER Ø / MM	1.1		
LOW ARM	C04M1+8.0 ☑ ☐		
STEER. ARM	AM23-1 ☑ ☐		
WHEEL SPACER / MM			
REAR DRIVE	GB2B ☑		LOW ☑ HIGH ☐
DIFF. OIL	10.000	DIFF WASHERS	
		WHEELHUB	AM06WL ☑ ☐

CHASSIS FLEX AND WEIGHT SETTINGS

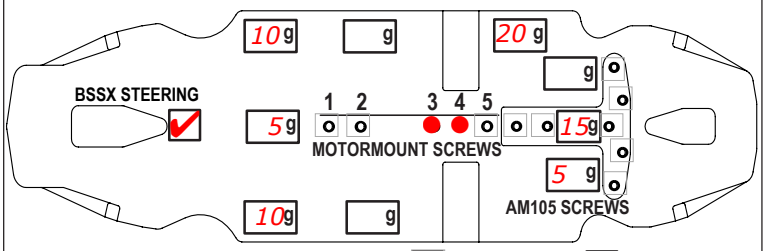

LOWER DECK C01B-X-MM2 ☐ C01B-X-MMA ☑

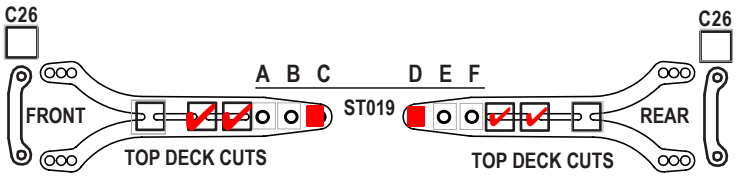

FRONT TOP DECK C127 ☐ C127S ☑ REAR TOP DECK C127 ☐ C127S ☑

TIRES	Matrix	
INSERTS	Matrix	
WHEELS	Matrix	
ADDITIVE	PHub Fusion	TIME - FR 9min RR 9min
TOTAL WEIGHT	1324	WEIGHT DISTRIBUTION F % R %
NOTES:		

MOTOR LATERAL SHIFT / MM	ACKERMANN POSITION
MOTOR ORCA 5.0T	SERVO
SPUR 112 PINION 28 RATIO 7.60	STEER TRAVEL IN OUT
BODY Twister 0.5	BATTERY ORCA
WING	RECEIVER
ESC ORCA OE1	RADIO
ESC SETTING	
BEST LAPTIME	QUALIF./FINAL POSITION 1 / 1

MR33 Oil

BW52 Battery Mounts

RCM-HRPL-L RC MAKER HORIZONTAL REAR POST BODY MOUNTING SET LITE