AWESOMATIX A800MMX

SETUP SHEET

NAME	Max Mächler	DATE	09-10.10.2021
COUNTRY	Germany	TEMP. °C AIR / TRACK	/
RACE	12th RT-Pegasus Masters	TRACK CONDITION	ASPHALT ☐ OUTDOOR ☐ INDOOR ☑ CARPET ☑ TECHNICAL ☐ MIXED ☑ FAST ☐
TRACK	Piding	TRACTION	LOW ☐ MEDIUM ☑ HIGH ☐

FRONT

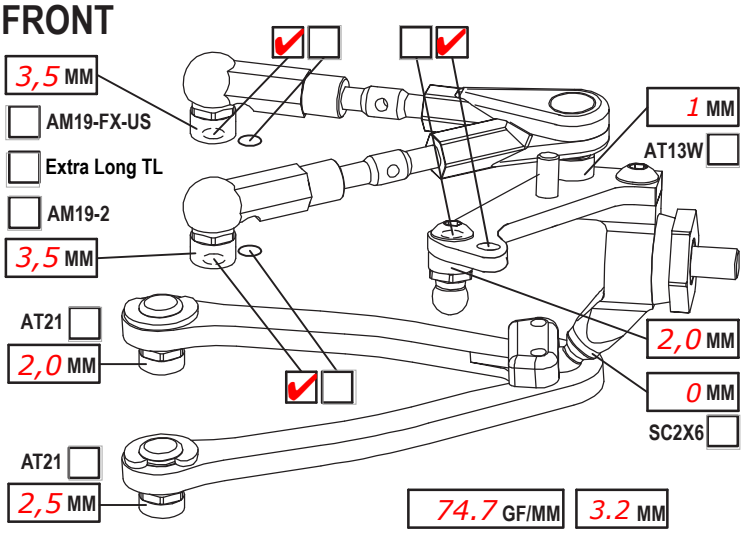

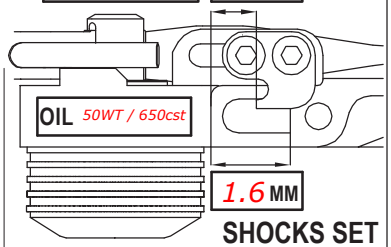

CAMBER ANGLE / °	2,25°		
CASTER ANGLE / °	5°		
TOE ANGLE / °	1,0°		
RIDE HEIGHT / MM	5,2		
DOWNSTOP / MM	6,0		
UPWNSTOP / MM	-		
STABILIZER Ø / MM	1,1		
LOW ARM C04M1+9.0	☑	☐	
STEER. ARM AM14LS	☑	☐	
WHEEL SPACER / MM	0		
FRONT DRIVE	SPOOL ☑	GB2B ☐	
DIFF. OIL	DIFF WASHERS		

SHOCKS SET

ROTOR	STD ☑	☐		
SPRING	STD ☐	S ☑		
DAMPER	D2.2 ☑	☐		
SRS/RHS ARR.	I ☑	II ☐		
PSS SETUP	25% ☐	15% ☐		
			LOW ☑	HIGH ☐
WHEELHUB	AM06WL ☑	☐		

REAR

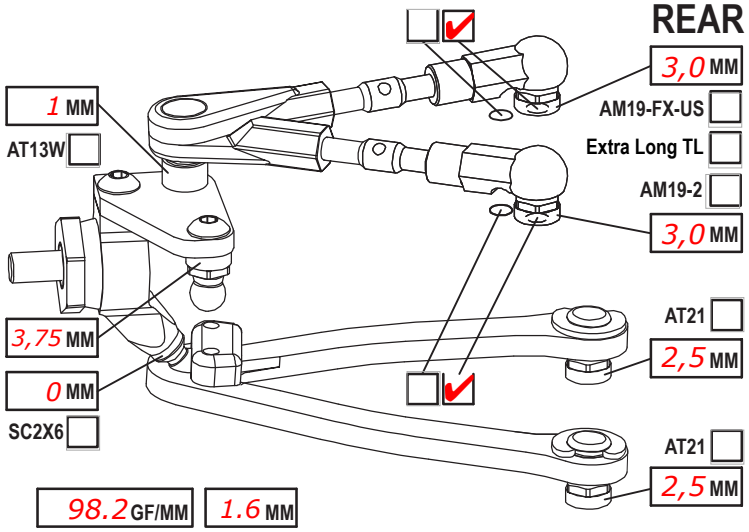

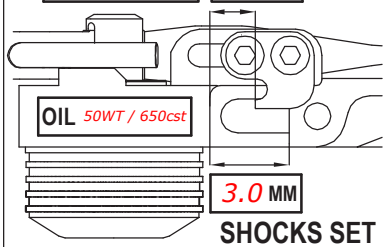

CAMBER ANGLE / °	2,25°		
CASTER ANGLE / °	-2°		
TOE ANGLE / °	2,5°		
RIDE HEIGHT / MM	5,4		
DOWNSTOP / MM	5,0		
UPWNSTOP / MM	-		
STABILIZER Ø / MM	1,1		
LOW ARM C04M1+8.0	☑	☐	
STEER. ARM AM23-1	☑	☐	
WHEEL SPACER / MM	0		
REAR DRIVE	GB2B ☑		
DIFF. OIL 10'000	DIFF WASHERS SH5x7x0,3		

SHOCKS SET

ROTOR	STD ☑	☐		
SPRING	STD ☐	S ☑		
DAMPER	D2.2 ☑	☐		
SRS/RHS ARR.	I ☑	II ☐		
PSS SETUP	25% ☐	15% ☐		
			LOW ☑	HIGH ☐
WHEELHUB	AM06WL ☑	☐		

CHASSIS FLEX AND WEIGHT SETTINGS

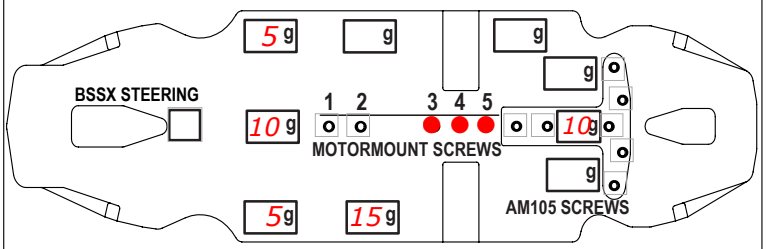

LOWER DECK C01B-X-MM2 ☐ C01B-X-MMA ☑

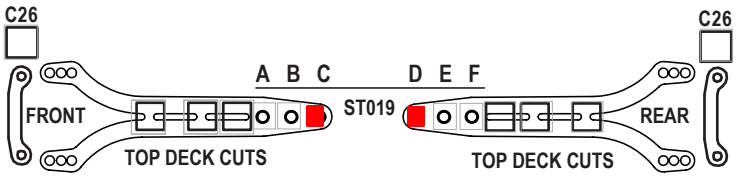

FRONT TOP DECK C127 ☐ C127S ☑ REAR TOP DECK C127 ☑ C127S ☐

TIRES	ETS Volante V28		
INSERTS	std.		
WHEELS	std.		
ADDITIVE	ETS Indoor	TIME - FR 15	RR 15
TOTAL WEIGHT 1334g	WEIGHT DISTRIBUTION F 49,25%	R 50,75%	
NOTES:			

MOTOR LATERAL SHIFT / MM 0	ACKERMANN POSITION max back.
MOTOR ETS 13,5T	SERVO MKS HBL575 SL
SPUR 100 PINION 38 RATIO 5.00	STEER TRAVEL IN 23° OUT
BODY ZooRacing Wolverine (58mm)	BATTERY SUNPADOW Platin 6000
WING Std.	RECEIVER SANWA RX493
ESC HW XR10 Pro G2	RADIO SANWA M17
ESC SETTING 0-Boost	
BEST LAPTIME 13,4	QUALIF./FINAL POSITION 1 / 2

Option parts: HRB / AT15 (F+R) / SB3x5AL / C07A / AM24-20 / BDL in front / AM180EVO (for this reason 2mm bumpsteer instead of 3,25)
--> Chassis = C01MMA
- ADC Damper cups used --> 50WT oil / Axon oil used in damper and diff.
- MXLR Tungsten weights: 10g at servo / 15g under receiver
- MXLR Wing Mount setting: 4th hole from the front
- MXLR Servo Horn at 17mm height