AWESOMATIX A800MMX

SETUP SHEET

NAME	Dionys Stadler	DATE	29.02-1.03.2020
COUNTRY	Germany	TEMP. °C AIR / TRACK	20 /
RACE	SM /RT -Pegasus	TRACK CONDITION	ASPHALT ☐ OUTDOOR ☐ INDOOR ☑ CARPET ☑ TECHNICAL ☑ MIXED ☐ FAST ☐
TRACK	Piding	TRACTION	LOW ☐ MEDIUM ☐ HIGH ☑

FRONT

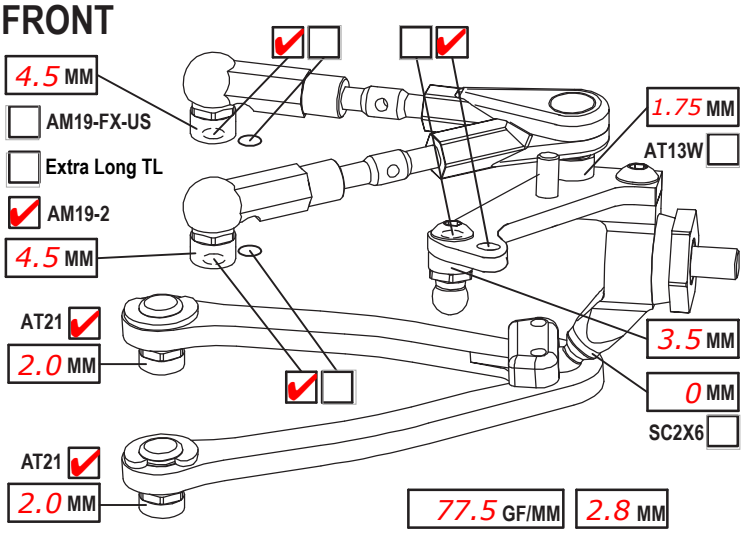

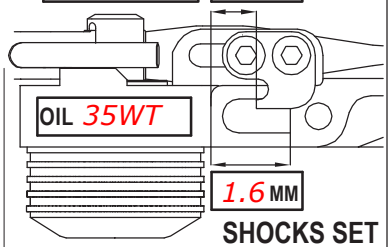

SHOCKS SET

CAMBER ANGLE / °	2	ROTOR	STD ☑ ☐
CASTER ANGLE / °	5	SPRING	STD ☐ S ☑
TOE ANGLE / °	-1	DAMPER	D2.2 ☑ ☐
RIDE HEIGHT / MM	5.2	SRS/RHS ARR.	I ☑ II ☐
DOWNSTOP / MM	6	PSS SETUP	25% ☑ 15% ☐
UPWNSTOP / MM			
STABILIZER Ø / MM	1.1		
LOW ARM C04M1+9.0	☑ ☐		
STEER. ARM AM14LS	☑ ☐		
WHEEL SPACER / MM	0		
FRONT DRIVE	SPOOL ☑ GB2B ☐		LOW ☑ HIGH ☐
DIFF. OIL	DIFF WASHERS		
		WHEELHUB	AM06WL ☑ ☐

REAR

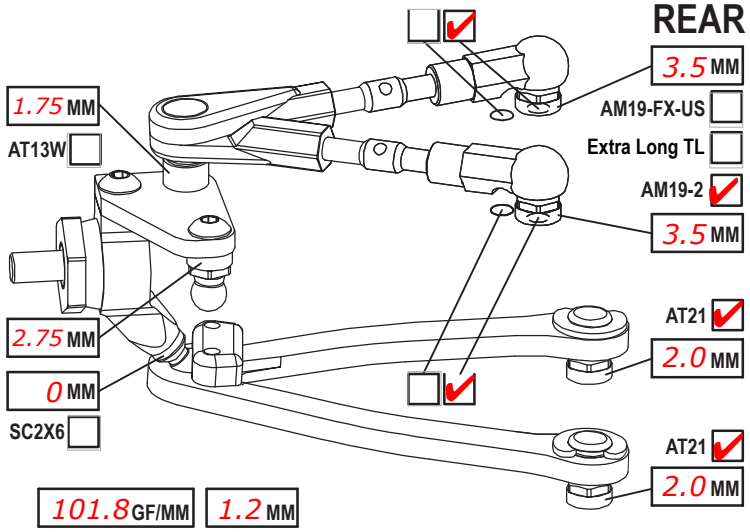

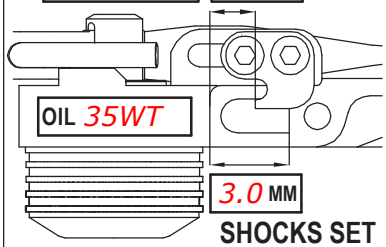

SHOCKS SET

CAMBER ANGLE / °	2	ROTOR	STD ☑ ☐
CASTER ANGLE / °	-2	SPRING	STD ☐ S ☑
TOE ANGLE / °	2.5	DAMPER	D2.2 ☑ ☐
RIDE HEIGHT / MM	5.4	SRS/RHS ARR.	I ☑ II ☐
DOWNSTOP / MM	4.8	PSS SETUP	25% ☐ 15% ☑
UPWNSTOP / MM			
STABILIZER Ø / MM	1.0		
LOW ARM C04M1+8.0	☑ ☐		
STEER. ARM AM23-1	☑ ☐		
WHEEL SPACER / MM	0		
REAR DRIVE	GB2B ☑		LOW ☑ HIGH ☐
DIFF. OIL 7500	DIFF WASHERS SH5x7x0.4		
		WHEELHUB	AM06WL ☑ ☐

CHASSIS FLEX AND WEIGHT SETTINGS

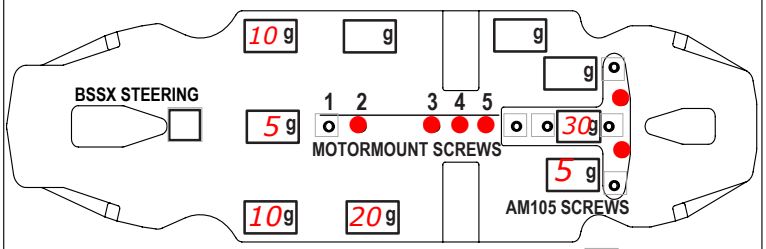

LOWER DECK C01B-X-MM2 ☑ C01B-X-MMA ☐

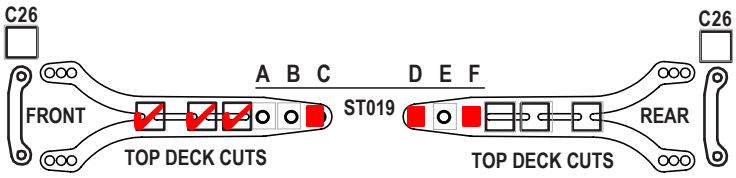

FRONT TOP DECK C127 ☐ C127S ☑ REAR TOP DECK C127 ☐ C127S ☑

TIRES	Volante R28 ETS		
INSERTS			
WHEELS			
ADDITIVE	MR33 V4	TIME - FR 10	RR 10
TOTAL WEIGHT	1323g	WEIGHT DISTRIBUTION F %	R %
NOTES:			

MOTOR LATERAL SHIFT / MM		ACKERMANN POSITION	max back
MOTOR	ORCA	SERVO	MKS
SPUR 116 PINION 29 RATIO	7.60	STEER TRAVEL IN 25 OUT	
BODY	Twister 0,5mm	BATTERY	ORCA 4200 Shorty
WING	Std	RECEIVER	Sanwa
ESC	ORCA OE1	RADIO	Sanwa M12S
ESC SETTING			
BEST LAPTIME	10,7	QUALIF./FINAL POSITION	2 / 2

BW52-BW7-BW8-AM105H
Diff and Damper used AXON Oil