AWESOMATIX A800MMX

SETUP SHEET

NAME	Ignatyev Nikita	DATE 14-16 February 2020	TEMP. °C AIR / TRACK 16°C / 16°C
COUNTRY	Russia		
RACE	Russian National 2020		
TRACK	Rc-Vladimir		

TRACK CONDITION	ASPHALT ☐	OUTDOOR ☐	INDOOR ☑	CARPET ☑
	TECHNICAL ☐		MIXED ☑	FAST ☑
TRACTION	LOW ☐		MEDIUM ☑	HIGH ☑

FRONT

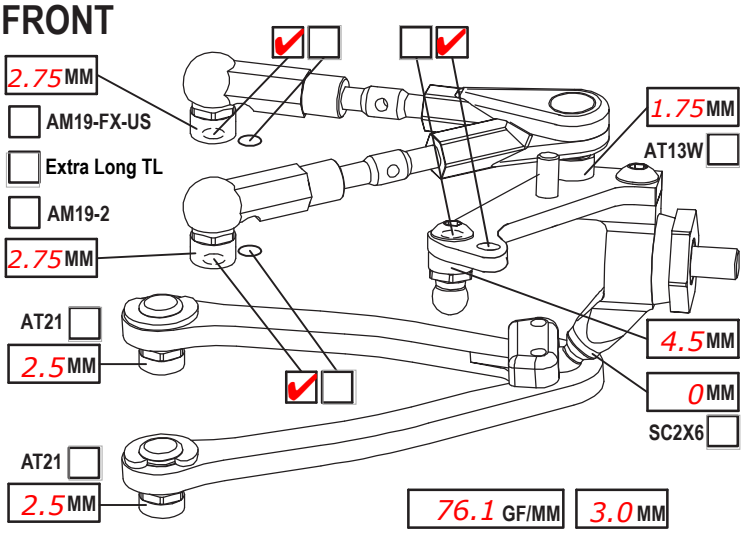

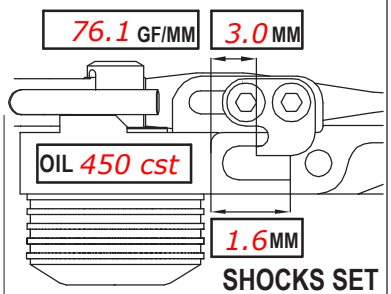

SHOCKS SET

CAMBER ANGLE / °	2	ROTOR STD ☑	☐
CASTER ANGLE / °	4	SPRING STD ☐	S ☑
TOE ANGLE / °	1.0 per side	DAMPER D2.2 ☑	☐
RIDE HEIGHT / MM	5.2	SRS/RHS ARR. I ☑	II ☐
DOWNSTOP / MM	5.8	PSS SETUP 25% ☐	15% ☑
UPWNSTOP / MM	-		
STABILIZER Ø / MM	1.1		
LOW ARM C04M1+9.0 ☑	☐		
STEER. ARM AM14LS ☑	☐		
WHEEL SPACER / MM	0		

FRONT DRIVE SPOOL ☑ GB2B ☐ LOW ☑ HIGH ☐

DIFF. OIL | DIFF WASHERS

WHEELHUB AM06WL ☑ ☐

REAR

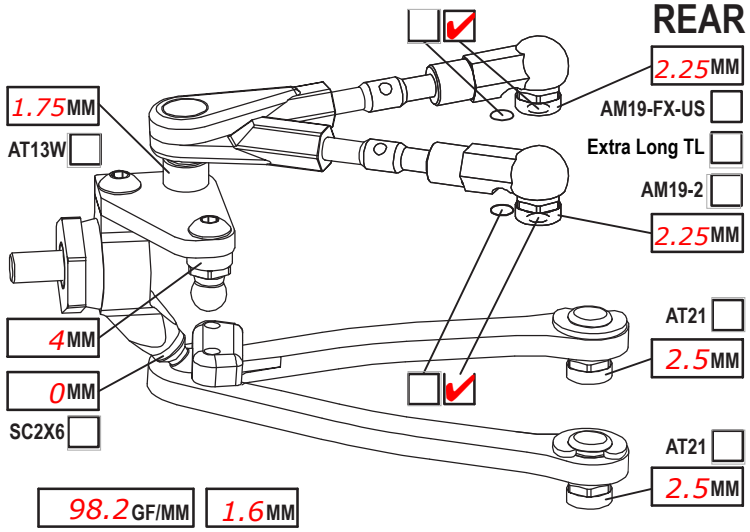

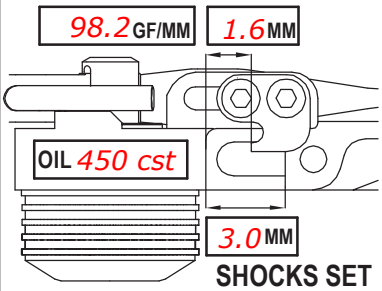

SHOCKS SET

CAMBER ANGLE / °	2	ROTOR STD ☑	☐
CASTER ANGLE / °	1 short	SPRING STD ☐	S ☑
TOE ANGLE / °	3.0	DAMPER D2.2 ☑	☐
RIDE HEIGHT / MM	5.4	SRS/RHS ARR. I ☑	II ☐
DOWNSTOP / MM	4.8	PSS SETUP 25% ☐	15% ☐
UPWNSTOP / MM	-		
STABILIZER Ø / MM	1.0		
LOW ARM C04M1+8.0 ☑	☐		
STEER. ARM AM23-1 ☑	☐		
WHEEL SPACER / MM	0		

REAR DRIVE GB2B ☑ LOW ☑ HIGH ☐

DIFF. OIL 10k | DIFF WASHERS WA03

WHEELHUB AM06WL ☑ ☐

CHASSIS FLEX AND WEIGHT SETTINGS

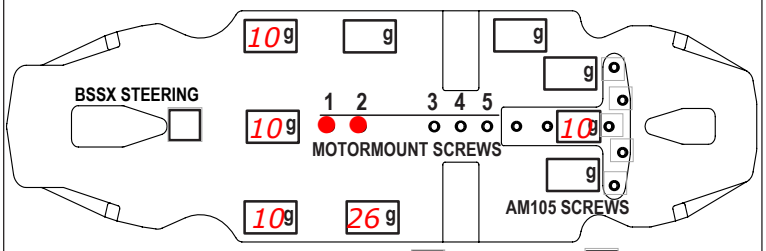

LOWER DECK C01B-X-MM2 ☐ C01B-X-MMA ☐

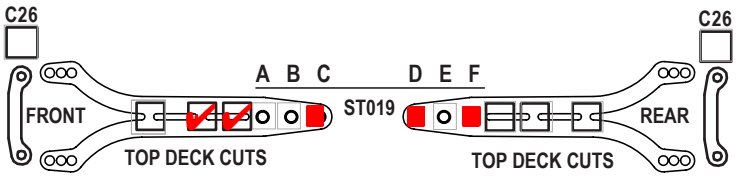

FRONT TOP DECK C127 ☑ C127S ☐ REAR TOP DECK C127 ☑ C127S ☐

TIRES	Sweep 32QTS		
INSERTS			
WHEELS			
ADDITIVE	Insane	TIME - FR 20	RR 20
TOTAL WEIGHT	1324	WEIGHT DISTRIBUTION F 49 %	R 51 %
NOTES:			

MOTOR LATERAL SHIFT / MM 0	ACKERMANN POSITION -1
MOTOR LRP X22 5.0T	SERVO SRT 8015
SPUR 110 PINION 28 RATIO 7.46	STEER TRAVEL IN 22 OUT
BODY ZooRacing HellCat	BATTERY LRP 3500 8.45V
WING STD	RECEIVER Sanwa RX482
ESC LRP FloxX v4.3	RADIO Sanwa M12
ESC SETTING	
BEST LAPTIME 9,7	QUALIF./FINAL POSITION 4 / 4

TH=95% / BR=85% /