AWESOMATIX A800MMX

SETUP SHEET

NAME	Max Mächler	DATE	06.-09.02.2020
COUNTRY	Germany	TEMP. °C AIR / TRACK	/
RACE	ETS Rnd.2	TRACK CONDITION	ASPHALT ☐ OUTDOOR ☐ INDOOR ☑ CARPET ☑ TECHNICAL ☐ MIXED ☑ FAST ☐
TRACK	Daun	TRACTION	LOW ☐ MEDIUM ☑ HIGH ☐

FRONT

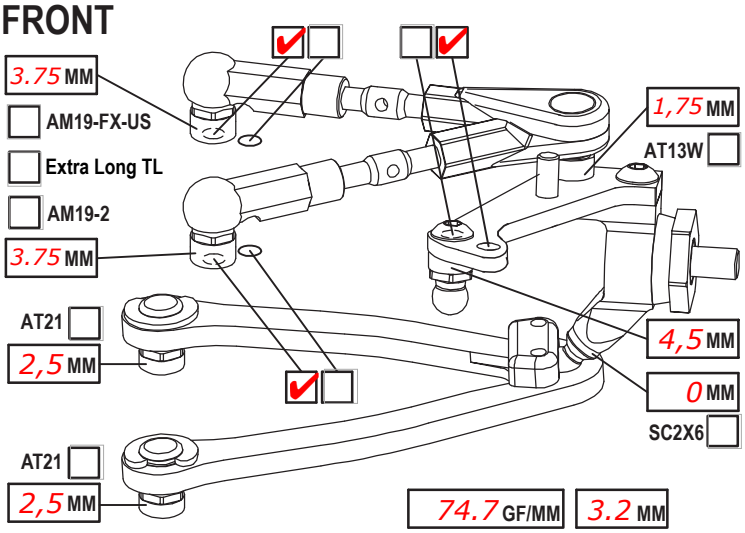

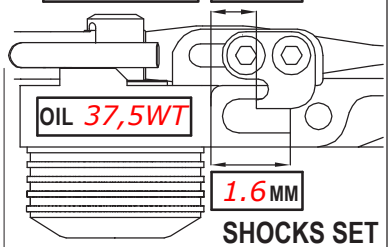

SHOCKS SET

CAMBER ANGLE / °	2	ROTOR	STD ☑ ☐
CASTER ANGLE / °	4	SPRING	STD ☐ S ☑
TOE ANGLE / °	1,0 per side	DAMPER	D2.2 ☑ ☐
RIDE HEIGHT / MM	5,2	SRS/RHS ARR.	I ☑ II ☐
DOWNSTOP / MM	5,8	PSS SETUP	25% ☐ 15% ☐
UPWNSTOP / MM	-		
STABILIZER Ø / MM	1,1		
LOW ARM C04M1+9.0	☑ ☐		
STEER. ARM AM14LS	☑ ☐		
WHEEL SPACER / MM	-		
FRONT DRIVE	SPOOL ☑ GB2B ☐		LOW ☑ HIGH ☐
DIFF. OIL		DIFF WASHERS	
		WHEELHUB	AM06WL ☑ ☐

REAR

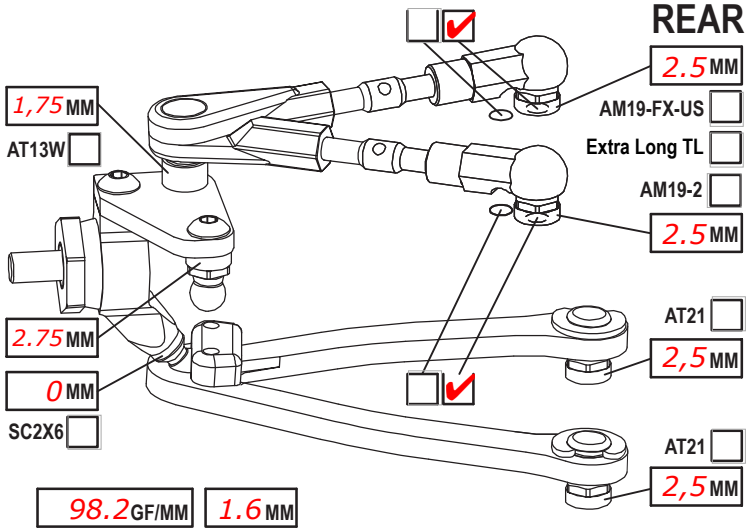

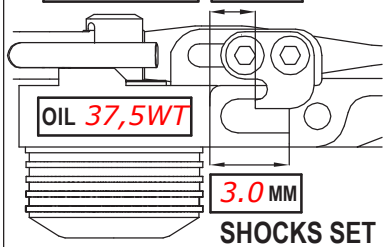

SHOCKS SET

CAMBER ANGLE / °	2	ROTOR	STD ☑ ☐
CASTER ANGLE / °	-2 short	SPRING	STD ☐ S ☑
TOE ANGLE / °	2,5	DAMPER	D2.2 ☑ ☐
RIDE HEIGHT / MM	5,4	SRS/RHS ARR.	I ☑ II ☐
DOWNSTOP / MM	4,6	PSS SETUP	25% ☐ 15% ☐
UPWNSTOP / MM	-		
STABILIZER Ø / MM	1,0		
LOW ARM C04M1+8.0	☑ ☐		
STEER. ARM AM23-1	☑ ☐		
WHEEL SPACER / MM	-		
REAR DRIVE		GB2B ☑	LOW ☑ HIGH ☐
DIFF. OIL	7500	DIFF WASHERS	SH5x7x0.4
		WHEELHUB	AM06WL ☑ ☐

CHASSIS FLEX AND WEIGHT SETTINGS

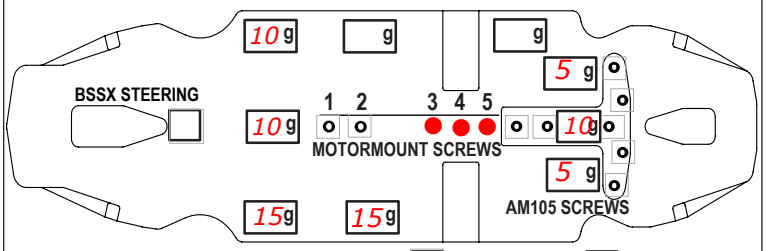

LOWER DECK C01B-X-MM2 ☐ C01B-X-MMA ☑

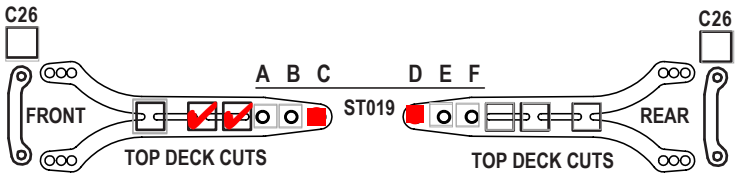

FRONT TOP DECK C127 ☐ C127S ☑ REAR TOP DECK C127 ☐ C127S ☑

TIRES	VOLANTE Indoor		
INSERTS	-		
WHEELS	-		
ADDITIVE	ETS V4	TIME - FR	RR
TOTAL WEIGHT		WEIGHT DISTRIBUTION F %	R %
NOTES:			

MOTOR LATERAL SHIFT / MM	0	ACKERMANN POSITION	max. back
MOTOR	13,5T	SERVO	MKS HBL575 SL
SPUR 100 PINION 38 RATIO	5.00	STEER TRAVEL IN 24 OUT	-
BODY	Zoo DBX	BATTERY	Sunpadow 6000 Platin
WING	Std.	RECEIVER	Sanwa RX482
ESC	Handout.	RADIO	Sanwa M17
ESC SETTING	RPM Limit		
BEST LAPTIME		QUALIF./FINAL POSITION	14 / 12

- AT15 Bearing Spacer in Wheel Hubs.
- Axon Oil used in Damper and Diff.
- SB3x5AL screws on top side of the car.
- AM24-20 Servo+Steering holder