AWESOMATIX A800MMX

SETUP SHEET

NAME	Donath Christian	DATE	19.1.01.2020
COUNTRY	Germany	TEMP. °C AIR / TRACK	/
RACE	Berlin Winter Series	TRACK CONDITION	ASPHALT ☐ OUTDOOR ☐ INDOOR ☑ CARPET ☑ TECHNICAL ☐ MIXED ☑ FAST ☐
TRACK	Berlin	TRACTION	LOW ☐ MEDIUM ☑ HIGH ☐

FRONT

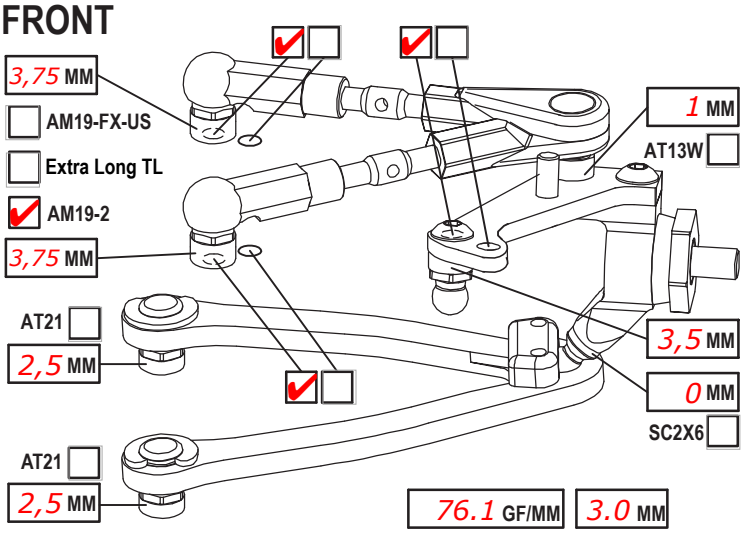

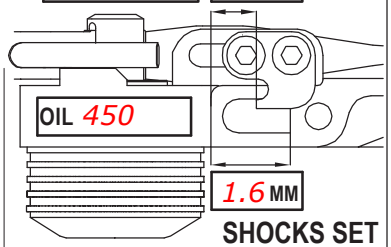

SHOCKS SET

CAMBER ANGLE / °	2	ROTOR	STD ☑
CASTER ANGLE / °	4	SPRING	STD ☐ S ☑
TOE ANGLE / °	1,25	DAMPER	D2.2 ☑
RIDE HEIGHT / MM	5,2	SRS/RHS ARR.	I ☑ II ☐
DOWNSTOP / MM	6	PSS SETUP	25% ☐ 15% ☐
UPWNSTOP / MM	-		
STABILIZER Ø / MM	1,2		
LOW ARM C04M1+9.0	☑ ☐		
STEER. ARM AM14LS	☑ ☐		
WHEEL SPACER / MM	-		
FRONT DRIVE	SPOOL ☑ GB2B ☐	LOW ☑ HIGH ☐	
DIFF. OIL	DIFF WASHERS		
		WHEELHUB	AM06WL ☑ ☐

REAR

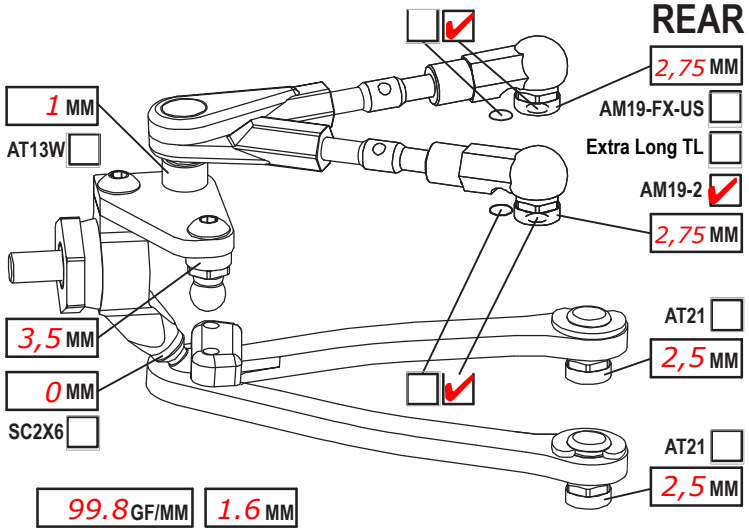

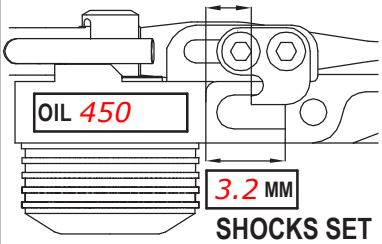

SHOCKS SET

CAMBER ANGLE / °	2	ROTOR	STD ☑
CASTER ANGLE / °	-4 short	SPRING	STD ☐ S ☑
TOE ANGLE / °	2,5	DAMPER	D2.2 ☑
RIDE HEIGHT / MM	5,4	SRS/RHS ARR.	I ☑ II ☐
DOWNSTOP / MM	4,8	PSS SETUP	25% ☐ 15% ☐
UPWNSTOP / MM	-		
STABILIZER Ø / MM	1,1		
LOW ARM C04M1+8.0	☑ ☐		
STEER. ARM AM23-1	☑ ☐		
WHEEL SPACER / MM	0,5		
REAR DRIVE	GB2B ☑	LOW ☑ HIGH ☐	
DIFF. OIL 10K	DIFF WASHERS SS		
		WHEELHUB	AM06WL ☑ ☐

CHASSIS FLEX AND WEIGHT SETTINGS

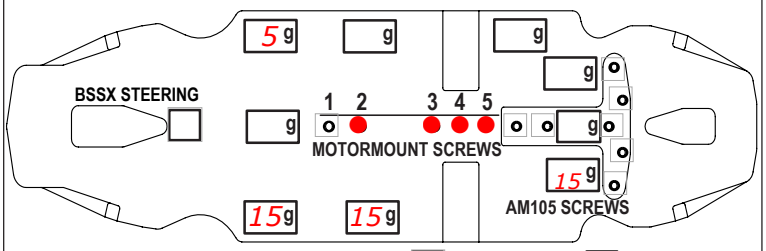

LOWER DECK C01B-X-MM2 ☐ C01B-X-MMA ☑

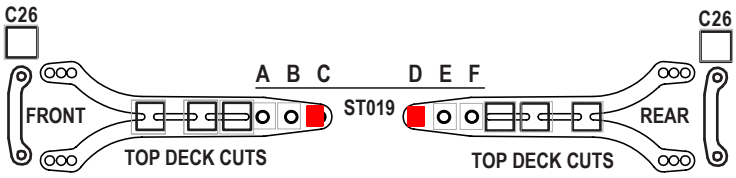

FRONT TOP DECK C127 ☐ C127S ☑ REAR TOP DECK C127 ☑ C127S ☐

TIRES	Team Powers 28		
INSERTS	-		
WHEELS	-		
ADDITIVE	ETS V4	TIME - FR 15	RR 15
TOTAL WEIGHT	1321	WEIGHT DISTRIBUTION F %	R %
NOTES:			

MOTOR LATERAL SHIFT / MM 0	ACKERMANN POSITION front
MOTOR MM13,5T	SERVO MKS
SPUR 100 PINION 38 RATIO 5.00	STEER TRAVEL IN 23 OUT
BODY Twister	BATTERY Sunpadow 6000CS
WING Twister	RECEIVER Sanwa RX 481
ESC MM ETS	RADIO Sanwa M17
ESC SETTING Blinky	
BEST LAPTIME 14,2	QUALIF./FINAL POSITION 3 / 3

-AT15 Bearing Spacer in Wheel Hubs
- Axon in Damper and Diff
-SB3x5AL screw on top side of the car