AWESOMATIX A800MMX

SETUP SHEET

NAME	Tobias Vogel	DATE	04/05.01.2020
COUNTRY	Germany	TEMP. °C AIR / TRACK	/
RACE	MCSS Open 2020	TRACK CONDITION	ASPHALT ☐ OUTDOOR ☐ INDOOR ☑ CARPET ☑ TECHNICAL ☐ MIXED ☑ FAST ☐
TRACK	Althengstett	TRACTION	LOW ☐ MEDIUM ☐ HIGH ☑

FRONT

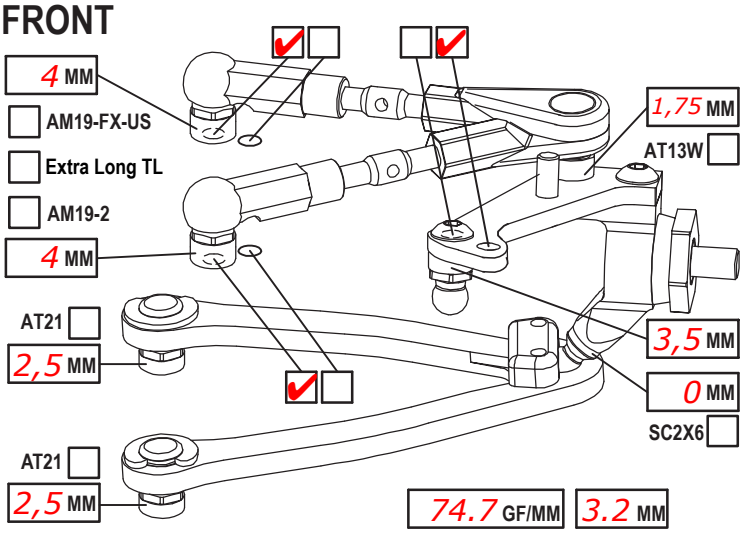

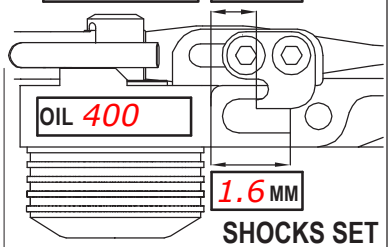

SHOCKS SET

CAMBER ANGLE / °	2	ROTOR	STD ☑
CASTER ANGLE / °	5	SPRING	STD ☐ S ☑
TOE ANGLE / °	-1 each side	DAMPER	D2.2 ☑
RIDE HEIGHT / MM	5,2	SRS/RHS ARR.	I ☑ II ☐
DOWNSTOP / MM	5,8	PSS SETUP	25% ☐ 15% ☐
UPWNSTOP / MM	-		
STABILIZER Ø / MM	1,2		
LOW ARM C04M1+9.0	☑ ☐		
STEER. ARM AM14LS	☑ ☐		
WHEEL SPACER / MM	-		
FRONT DRIVE	SPOOL ☑ GB2B ☐	LOW ☑	HIGH ☐
DIFF. OIL	DIFF WASHERS		
		WHEELHUB AM06WL	☐ ☐

REAR

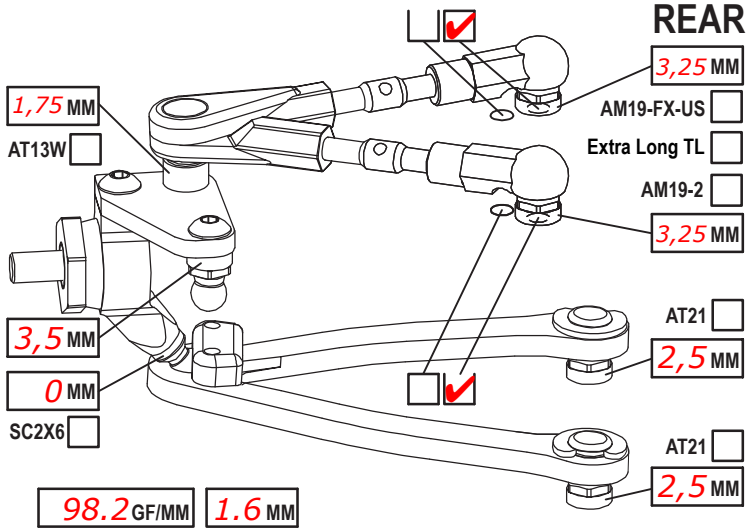

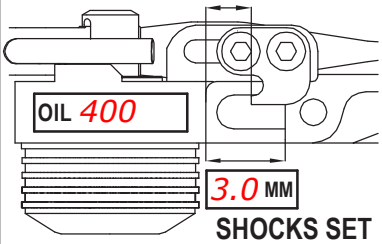

SHOCKS SET

CAMBER ANGLE / °	2	ROTOR	STD ☑
CASTER ANGLE / °	+1	SPRING	STD ☐ S ☑
TOE ANGLE / °	2,25	DAMPER	D2.2 ☑
RIDE HEIGHT / MM	5,4	SRS/RHS ARR.	I ☑ II ☐
DOWNSTOP / MM	4,8	PSS SETUP	25% ☐ 15% ☐
UPWNSTOP / MM	-		
STABILIZER Ø / MM	1,1		
LOW ARM C04M1+8.0	☑ ☐		
STEER. ARM AM23-1	☑ ☐		
WHEEL SPACER / MM			
REAR DRIVE	GB2B ☐	LOW ☑	HIGH ☐
DIFF. OIL 10,000	DIFF WASHERS SH5x7x0,4		
		WHEELHUB AM06WL	☐ ☐

CHASSIS FLEX AND WEIGHT SETTINGS

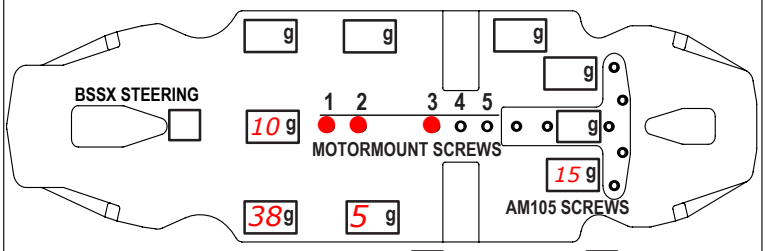

LOWER DECK C01B-X-MM2 ☐ C01B-X-MMA ☑

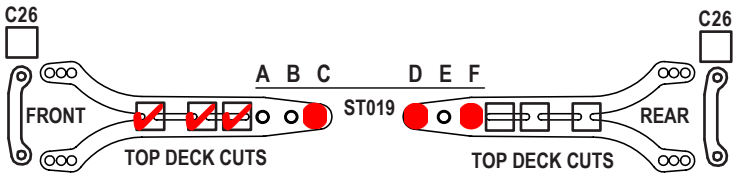

FRONT TOP DECK C127 ☐ C127S ☑ REAR TOP DECK C127 ☐ C127S ☑

TIRES	Volante		
INSERTS	Volante		
WHEELS	Volante		
ADDITIVE	MR 33 V4	TIME - FR 12	RR 12
TOTAL WEIGHT 1324	WEIGHT DISTRIBUTION F 51 %	R 49 %	
NOTES:			

MOTOR LATERAL SHIFT / MM 0,5mm	ACKERMANN POSITION Rear
MOTOR Blitreme2 13,5T	SERVO
SPUR 100 PINION 42 RATIO 4.52	STEER TRAVEL IN 22 OUT
BODY Bittydesign Hyper	BATTERY Orca InfiniteX LCG 6300
WING Hyper	RECEIVER Sanwa
ESC Orca OE101	RADIO Sanwa
ESC SETTING	
BEST LAPTIME	QUALIF./FINAL POSITION 3 / 2