AWESOMATIX A800MMX

SETUP SHEET

NAME	JASMIN LOIC	DATE	6-8/12/2019
COUNTRY	FRANCE	TEMP. °C AIR / TRACK	20 / 20
RACE	EWS INTERNATIONAL	TRACK CONDITION	ASPHALT ☐ OUTDOOR ☐ INDOOR ☑ CARPET ☑ TECHNICAL ☐ MIXED ☑ FAST ☐
TRACK	EWS	TRACTION	LOW ☑ MEDIUM ☑ HIGH ☐

FRONT

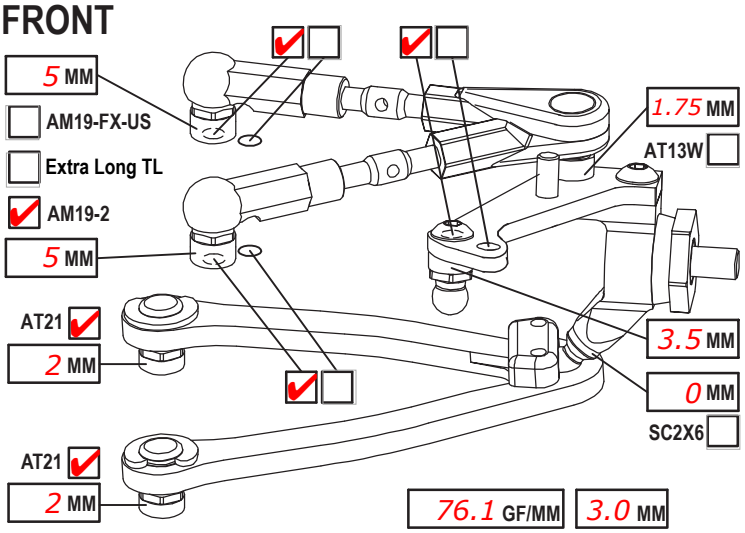

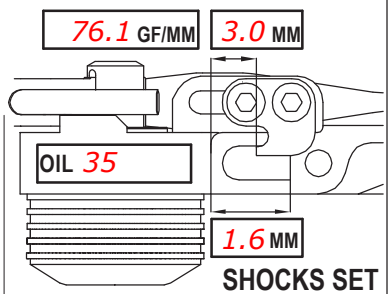

SHOCKS SET

CAMBER ANGLE / °	-2	ROTOR	STD ☑
CASTER ANGLE / °	4	SPRING	STD ☐ S ☑
TOE ANGLE / °	1	DAMPER	D2.2 ☑
RIDE HEIGHT / MM	5.2	SRS/RHS ARR.	I ☑ II ☐
DOWNSTOP / MM	5.8	PSS SETUP	25% ☐ 15% ☐
UPWNSTOP / MM			
STABILIZER Ø / MM	1.1		
LOW ARM	C04M1+9.0 ☑ ☐		
STEER. ARM	AM14LS ☑ ☐		
WHEEL SPACER / MM			
FRONT DRIVE	SPOOL ☑ GB2B ☐		LOW ☑ HIGH ☐
DIFF. OIL		DIFF WASHERS	
		WHEELHUB	AM06WL ☑ ☐

REAR

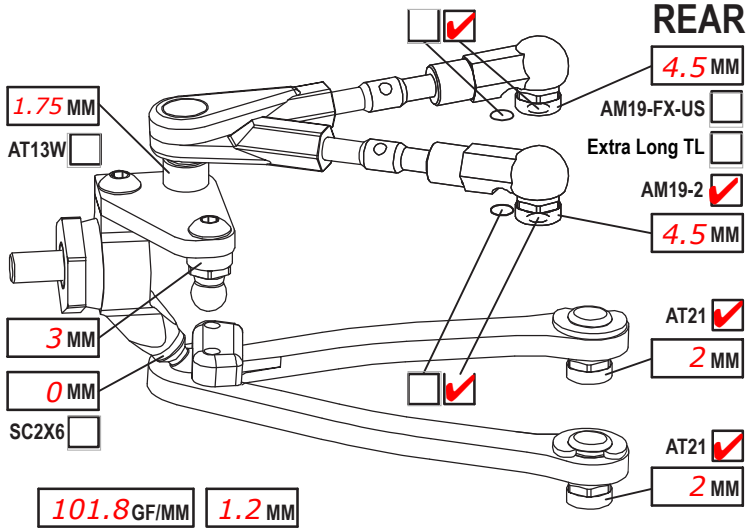

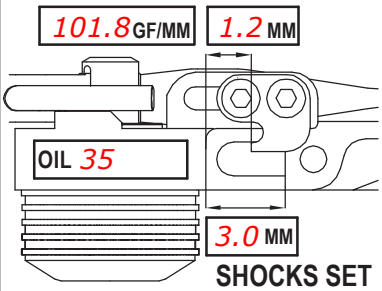

SHOCKS SET

CAMBER ANGLE / °	-2	ROTOR	STD ☑
CASTER ANGLE / °	-2	SPRING	STD ☐ S ☑
TOE ANGLE / °	3	DAMPER	D2.2 ☑
RIDE HEIGHT / MM	5.4	SRS/RHS ARR.	I ☑ II ☐
DOWNSTOP / MM	4.8	PSS SETUP	25% ☐ 15% ☐
UPWNSTOP / MM			
STABILIZER Ø / MM	1.0		
LOW ARM	C04M1+8.0 ☑ ☐		
STEER. ARM	AM23-1 ☑ ☐		
WHEEL SPACER / MM			
REAR DRIVE		GB2B ☐	LOW ☑ HIGH ☐
DIFF. OIL	10k	DIFF WASHERS	SH5x7x0.4
		WHEELHUB	AM06WL ☑ ☐

CHASSIS FLEX AND WEIGHT SETTINGS

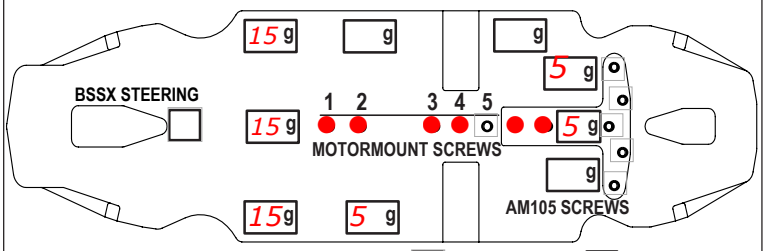

LOWER DECK C01B-X-MM2 ☐ C01B-X-MMA ☑

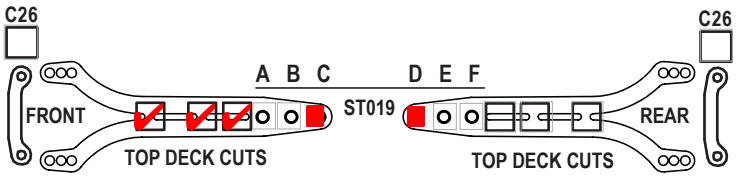

FRONT TOP DECK C127 ☐ C127S ☑ REAR TOP DECK C127 ☐ C127S ☑

TIRES	VOLANTE 28 ETS		
INSERTS			
WHEELS			
ADDITIVE	MR33 V4	TIME - FR	10 RR 10
TOTAL WEIGHT	1324	WEIGHT DISTRIBUTION	F 51 % R 49 %
NOTES:	cleaning with additive		

MOTOR LATERAL SHIFT / MM	0	ACKERMANN POSITION	1
MOTOR	LRP 5.0T (12.1 / -5°)	SERVO	DLP680
SPUR 115 PINION 27 RATIO	8.09	STEER TRAVEL IN	24 OUT
BODY	Twister 0.5	BATTERY	LRP 3900 LCG G3 (8.36V)
WING	Hellcat 0.7	RECEIVER	RX482
ESC	LRP	RADIO	M12S
ESC SETTING	6-3-6-1-3-2-2-3-4-0-2		
BEST LAPTIME	13.88	QUALIF./FINAL POSITION	10 / 10

BW52
SPR08 on the front
Axon oils