AWESOMATIX A800X EVO

SETUP SHEET
M. Mächler / Arn0

NAME	Thimo Weissbauer	DATE	28.10.2018
COUNTRY	Austria	TEMP. °C AIR / TRACK	/
RACE	ETS Rd. 1	TRACK CONDITION	ASPHALT ☐ (OUTDOOR ☐ INDOOR ☐) CARPET ☐ TECHNICAL ☐ MIXED ☑ FAST ☐
TRACK	Vienna	TRACTION	LOW ☐ MEDIUM ☑ HIGH ☐

FRONT

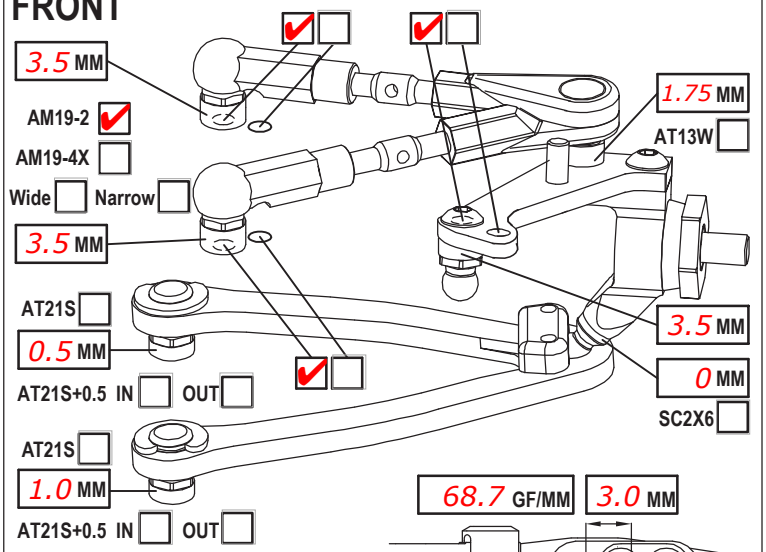

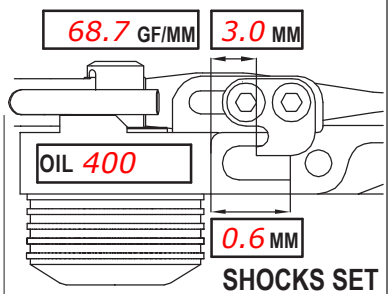

SHOCKS SET

CAMBER ANGLE / °	2.0	ROTOR	STD ☑
CASTER ANGLE / °	4.0	SPRING	STD ☐ S ☑
TOE ANGLE / °	1.0 per side	DAMPER	D2.2 ☐
RIDE HEIGHT / MM	5.2	SRS/RHS ARR.	I ☑ II ☐
DOWNSTOP / MM	5.8	PSS SETUP	MM A ☐ B ☐
UPWNSTOP / MM	-		
STABILIZER Ø / MM	1.1		
LOW ARM C04M1+0.5 ☐	+9.0 ☑		
STEER. ARM AM14LS ☑	☐		
WHEEL SPACER / MM			
FRONT DRIVE	SPOOL ☑ GB2B ☐		LOW ☑ HIGH ☐
DIFF. OIL		DIFF WASHERS	
DOGBONE DRIVE	ST02 ☐	WHEELHUB	AM06WL ☑ ☐

REAR

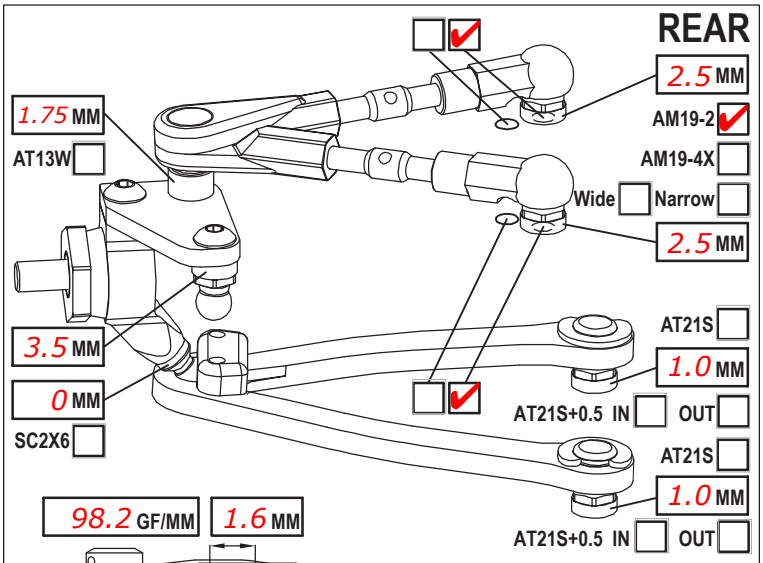

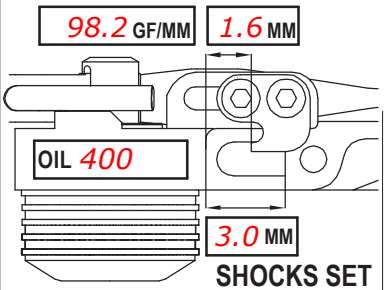

SHOCKS SET

CAMBER ANGLE / °	2.0	ROTOR	STD ☑
CASTER ANGLE / °	-1 short	SPRING	STD ☐ S ☑
TOE ANGLE / °	2.75	DAMPER	D2.2 ☐
RIDE HEIGHT / MM	5.4	SRS/RHS ARR.	I ☑ II ☐
DOWNSTOP / MM	4.6	PSS SETUP	MM A ☐ B ☐
UPWNSTOP / MM	-		
STABILIZER Ø / MM	1.0		
LOW ARM C04M1+0.5 ☐	+8.0 ☑		
STEER. ARM AM23 ☑	☐		
WHEEL SPACER / MM			
REAR DRIVE	GB2B ☐		LOW ☑ HIGH ☐
DIFF. OIL	7k LRP	DIFF WASHERS	
DOGBONE DRIVE	EVD ☐	WHEELHUB	AM06WL ☑ ☐

FRAME FLEX SETTING

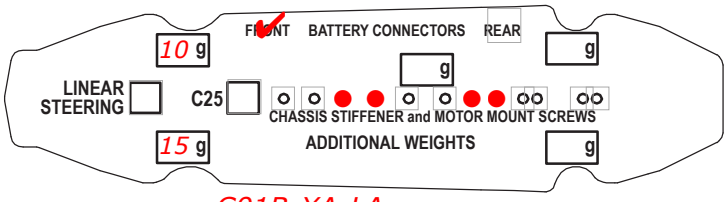

LOWER DECK C01B-XA-LA

CHASSIS STIFFENER ST135 ☐ ST165 ☑

☐ C26 ☐ SHIM UNDER STIFFNER: 0.5 ST55 ☑ ☐ C26 ☑

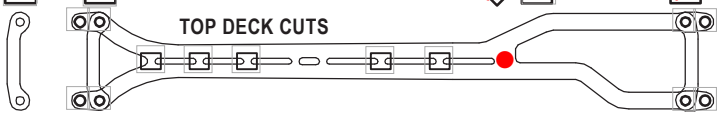

☐ ST09 TOP DECK C27X-1 ☑ VTD ☐ ☐ ST09 ☐

TIRES	Volante 28R (ETS Tire)		
INSERTS			
WHEELS			
ADDITIVE	MR33 (ETS)	TIME - FR 10	RR 10

NOTES

MOTOR LATERAL SHIFT / MM	0.0	ACKERMANN SHIMS / MM	1.0
MOTOR	LRP 5.5t	SERVO	MKS HBL575 SL
SPUR 114 PINION 28 RATIO	7.74	STEER TRAVEL IN 25 OUT	
BODY	PF Type-S	BATTERY	LRP 5500 ULCG
WING	PL	RECEIVER	Sanwa 481
ESC	LRP FlowX	RADIO	Sanwa M12S
ESC SETTING			
BEST LAPTIME		QUALIF./FINAL POSITION	6 / 5

COMMENTS

IFJ/IRJ
LA-Set used
Brass wight on bottom of ULCG battery