AWESOMATIX A800X EVO

SETUP SHEET
M. Mächler / Arn0

NAME	Donath Christian	DATE	28-30.09.2018
COUNTRY	Germany	TEMP. °C AIR / TRACK	/
RACE	German Nationals	TRACK CONDITION	ASPHALT ☐ (OUTDOOR ☐ INDOOR ☐) CARPET ☑ TECHNICAL ☑ MIXED ☐ FAST ☐
TRACK	Arena33	TRACTION	LOW ☐ MEDIUM ☑ HIGH ☑

FRONT

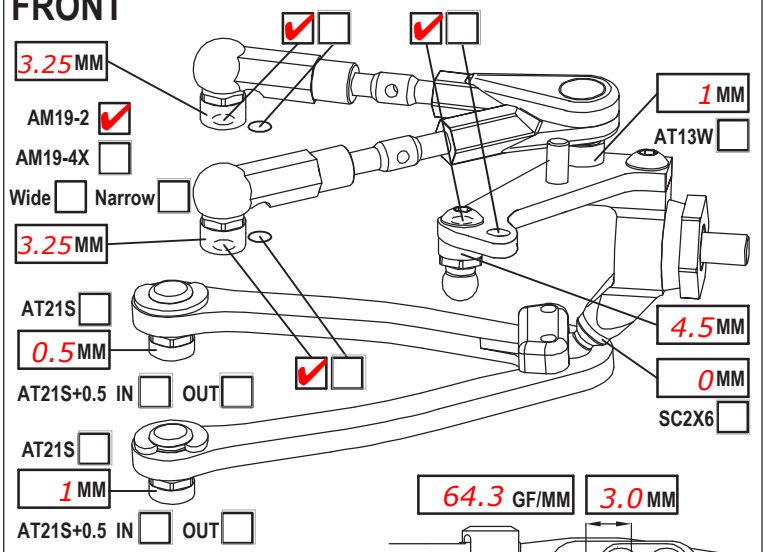

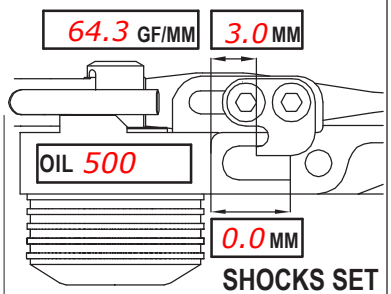

CAMBER ANGLE / °	2
CASTER ANGLE / °	4
TOE ANGLE / °	1 each side
RIDE HEIGHT / MM	5.2
DOWNSTOP / MM	6,0
UPWNSTOP / MM	-
STABILIZER Ø / MM	1.2
LOW ARM C04M1+0.5 ☐	+9 ☑
STEER. ARM AM14LS ☑	☐
WHEEL SPACER / MM	-

SHOCKS SET

ROTOR	STD ☑		☐
SPRING	STD ☐	S	☑
DAMPER	D2.2 ☑		☐
SRS/RHS ARR.	I ☑	II	☐
PSS SETUP -	MM	A ☐	B ☐

FRONT DRIVE SPOOL ☑ GB2B ☐ LOW ☑ HIGH ☐

DIFF. OIL | DIFF WASHERS

DOGBONE DRIVE ST02 ☐ | WHEELHUB AM06WL ☑ ☐

REAR

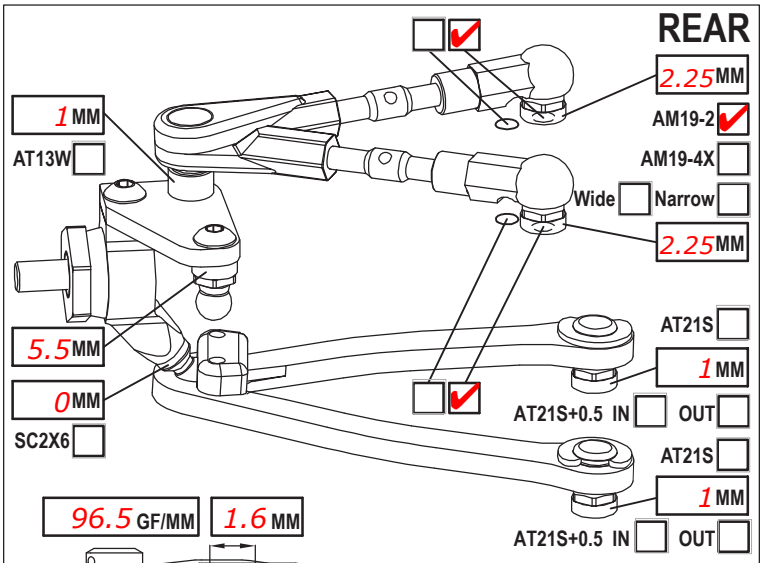

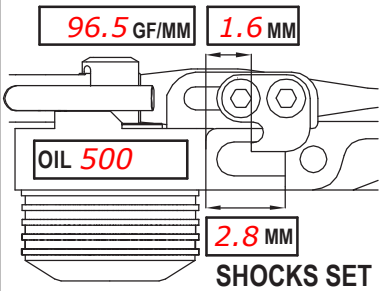

CAMBER ANGLE / °	2,2
CASTER ANGLE / °	-2
TOE ANGLE / °	2
RIDE HEIGHT / MM	5.4
DOWNSTOP / MM	4.7
UPWNSTOP / MM	-
STABILIZER Ø / MM	1.1
LOW ARM C04M1+0.5 ☐	+8 ☑
STEER. ARM AM23 ☑	☐
WHEEL SPACER / MM	0,2

SHOCKS SET

ROTOR	STD ☑		☐
SPRING	STD ☐	S	☑
DAMPER	D2.2 ☑		☐
SRS/RHS ARR.	I ☑	II	☐
PSS SETUP	MM	A ☐	B ☐

REAR DRIVE GB2B ☑ LOW ☑ HIGH ☐

DIFF. OIL 15.000 | DIFF WASHERS SS = Small Shims

DOGBONE DRIVE EVD ☐ | WHEELHUB AM06WL ☑ ☐

FRAME FLEX SETTING

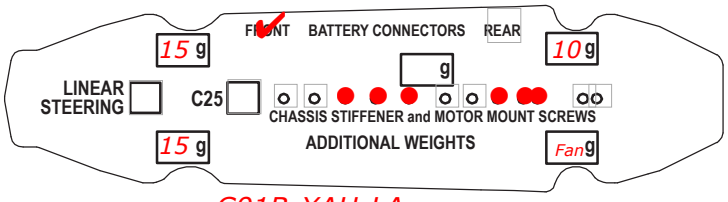

LOWER DECK C01B-XAH-LA

CHASSIS STIFFENER ST135 ☐ ST165 ☑

☐ C26 ☐ SHIM UNDER STIFFNER: 0.5 ST55 ☑ ☐ C26 ☑

TOP DECK CUTS

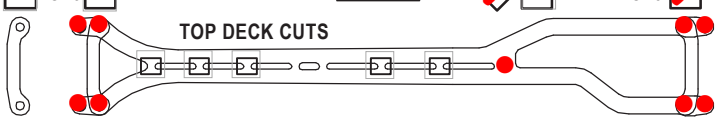

☐ ST09 TOP DECK C27X-1 ☑ VTD ☐ ☐ ST09 ☐

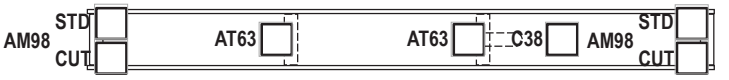

TIRES	Volante 28R (ETS Tire)
INSERTS	
WHEELS	
ADDITIVE	CS High Grip

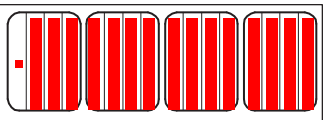

TIME - FR 10 RR 10

NOTES

MOTOR LATERAL SHIFT / MM	0	ACKERMANN SHIMS / MM	1
MOTOR	MOTIV 13,5T	SERVO	Sanwa
SPUR 100 PINION 40 RATIO		STEER TRAVEL IN 23 OUT	
BODY	PROTOform Mazda Speed 6 Prolite	BATTERY	LRP 6400 SS G2
WING	Std. ProLite	RECEIVER	Sanwa
ESC	Hobbywing	RADIO	Sanwa M12
ESC SETTING	Zero Boost		
BEST LAPTIME	14,3	QUALIF./FINAL POSITION	- / -

COMMENTS

- Rear Springs bent up to 110°.
- AT15 Bearing spacers used front and rear in Wheelhubs.