AWESOMATIX A800X EVO

SETUP SHEET
M. Mächler / Arn0

NAME	Brandon Clements	DATE	9/16/2018
COUNTRY	USA	TEMP. °C AIR / TRACK	/
RACE		ASPHALT ☐ (OUTDOOR ☐ INDOOR ☑)	CARPET ☑
TRACK	TQ	TRACK CONDITION: TECHNICAL ☑ MIXED ☑	FAST ☐
		TRACTION: LOW ☐ MEDIUM ☑	HIGH ☐

FRONT

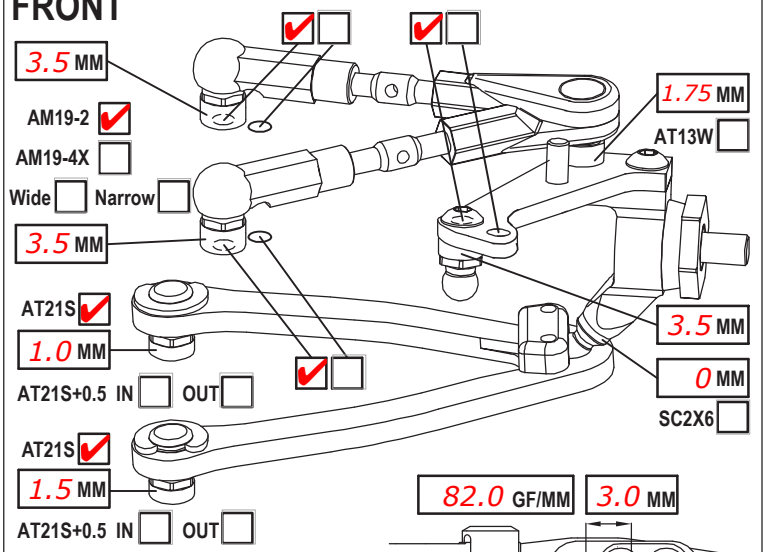

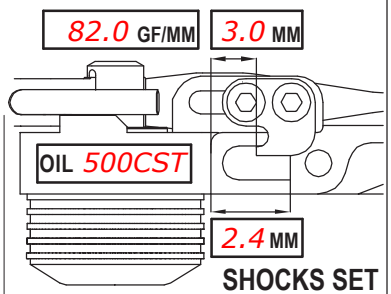

SHOCKS SET

CAMBER ANGLE / °	-1.75	ROTOR STD ☑	
CASTER ANGLE / °	4	SPRING STD ☐	S ☑
TOE ANGLE / °	1 Out	DAMPER D2.2 ☑	
RIDE HEIGHT / MM	5.2	SRS/RHS ARR. I ☑	II ☐
DOWNSTOP / MM	6.0	PSS SETUP MM A ☐	B ☐
UPWNSTOP / MM			
STABILIZER Ø / MM	1.1		
LOW ARM C04M1+0.5 ☐	+9 ☑		
STEER. ARM AM14LS ☑	☐		
WHEEL SPACER / MM			
FRONT DRIVE SPOOL ☑ GB2B ☐		LOW ☑	HIGH ☐
DIFF. OIL	DIFF WASHERS		
DOGBONE DRIVE ST02 ☐	WHEELHUB AM06WL ☑		☐

REAR

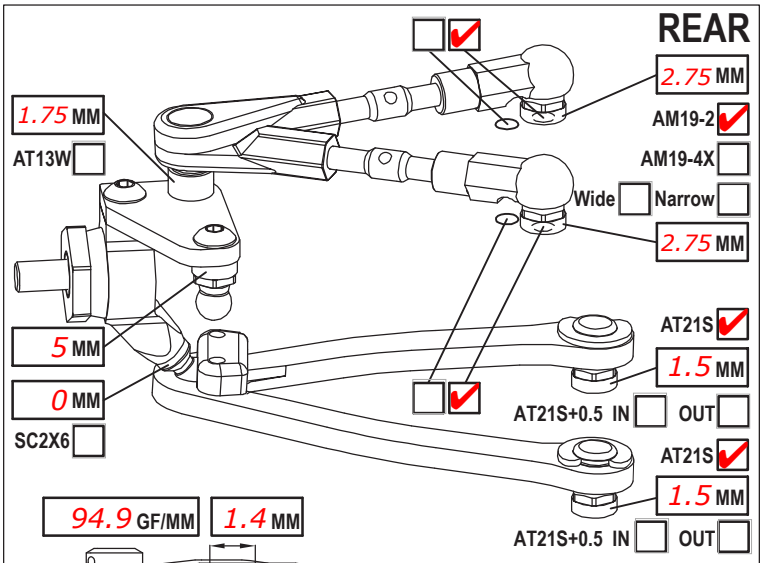

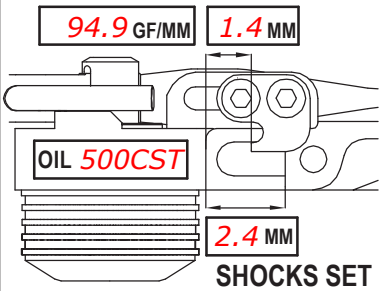

SHOCKS SET

CAMBER ANGLE / °	-2	ROTOR STD ☑	
CASTER ANGLE / °	0	SPRING STD ☐	S ☑
TOE ANGLE / °	2.75	DAMPER D2.2 ☑	
RIDE HEIGHT / MM	5.4	SRS/RHS ARR. I ☑	II ☐
DOWNSTOP / MM	5.6	PSS SETUP MM A ☐	B ☐
UPWNSTOP / MM			
STABILIZER Ø / MM	1.0		
LOW ARM C04M1+0.5 ☐	+8 ☑		
STEER. ARM AM23 ☑	☐		
WHEEL SPACER / MM			
REAR DRIVE GB2B ☑		LOW ☑	HIGH ☐
DIFF. OIL 7K	DIFF WASHERS		
DOGBONE DRIVE EVD ☐	WHEELHUB AM06WL ☑		☐

FRAME FLEX SETTING

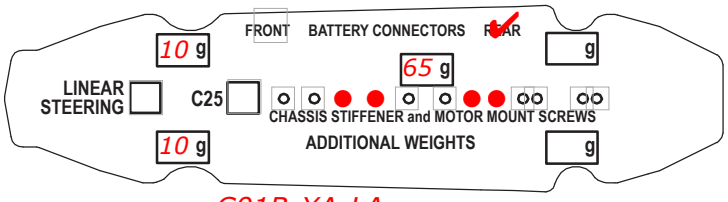

LOWER DECK C01B-XA-LA

CHASSIS STIFFENER ST135 ☐ ST165 ☑

☐ C26 ☐ SHIM UNDER STIFFNER: 0 ST55 ☑ ☐ C26 ☐

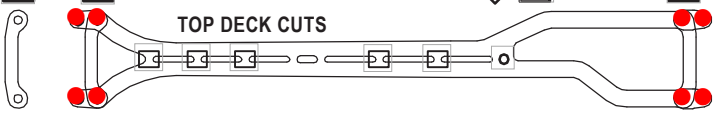

☐ ST09 TOP DECK C27X-1 ☑ VTD ☐ ☐ ST09 ☐

AM98 STD ☐ CUT ☐ AT63 ☐ AT63 ☐ C38 ☐ AM98 STD ☐ CUT ☐

TIRES Gravity	
INSERTS	
WHEELS	
ADDITIVE SXT	TIME - FR RR

NOTES

MOTOR LATERAL SHIFT / MM 0	ACKERMANN SHIMS / MM 1
MOTOR R1 4.5	SERVO R1
SPUR 114 PINION 28 RATIO 7.74	STEER TRAVEL IN OUT
BODY Type S	BATTERY R1 LCG 6000
WING Standard	RECEIVER Sanwa
ESC R1	RADIO Sanwa
ESC SETTING	
BEST LAPTIME 9.5	QUALIF./FINAL POSITION /

COMMENTS

DL link
10G in front bumper