AWESOMATIX A800X

SETUP SHEET
M. Mächler / Arn0
PetitRC.com

NAME	Cyril N'Diaye	DATE	18/02/18
COUNTRY	France	TEMP. °C AIR / TRACK	°C / °C
RACE	Longwy winter serie	TRACK CONDITION	ASPHALT ☐ (OUTDOOR ☐ INDOOR ☐) CARPET ☐ TECHNICAL ☐ MIXED ☑ FAST ☐
TRACK	Cosec	TRACTION	LOW ☐ MEDIUM ☑ HIGH ☐

FRONT

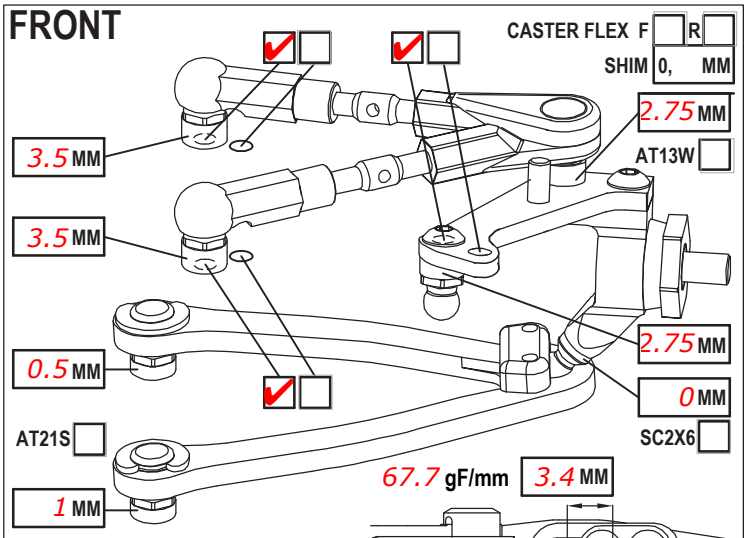

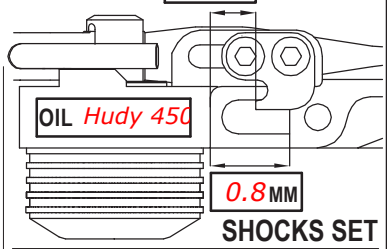

CAMBER ANGLE / °	-2		
CASTER ANGLE / °	4		
TOE ANGLE / °	1 each side		
RIDE HEIGHT / MM	5		
DOWNSTOP / MM	5.8		
UPWNSTOP / MM			
STABILIZER Ø / MM	1.1		
LOW ARM C04M1 ☐	+1.5 ☐		
STEER. ARM AM14A ☐	Ls ☐		
WHEEL SPACER / MM	0		

SHOCKS SET

ROTOR	STD ☑	☐
SPRING	STD ☐	S ☑
DAMPER	D2.2 ☐	☐
ACTION	SYM. ☐	ASYM. ☐
SRS/RHS ARR.	I ☑	II ☐

FRONT DRIVE	GD3 ☐	SPOOL ☑	GB2B ☐	LOW ☑	HIGH ☐
DIFF. OIL	DIFF WASHERS				
DOGBONE DRIVE	ST17 ☐	ST11 ☐	ST12 ☐	BB ☐	ST02 ☐
WHEELHUB	AM06WL ☐	AM06S-M ☐	AM06W ☐		☐

REAR

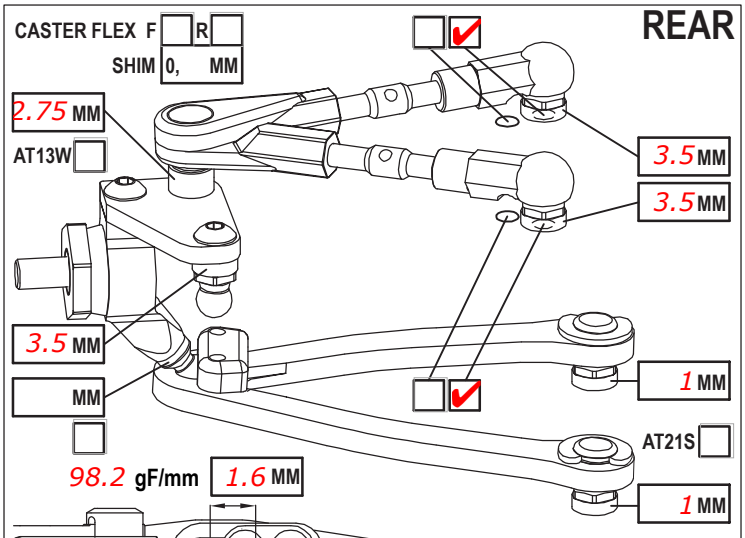

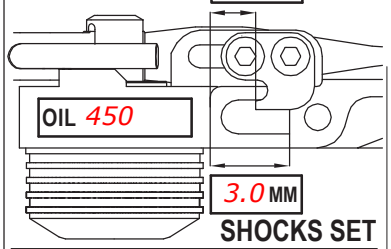

CAMBER ANGLE / °	-2		
CASTER ANGLE / °	-2		
TOE ANGLE / °	2.8		
RIDE HEIGHT / MM	5.2		
DOWNSTOP / MM	4.8		
UPWNSTOP / MM			
STABILIZER Ø / MM	1.0		
LOW ARM C04M1 ☐	+0.5 ☐		
STEER. ARM AM23 ☐	☐		
WHEEL SPACER / MM			

SHOCKS SET

ROTOR	STD ☑	☐
SPRING	STD ☐	S ☑
DAMPER	D2.2 ☐	☐
ACTION	SYM. ☐	ASYM. ☐
SRS/RHS ARR.	I ☑	II ☐

REAR DRIVE	GD3R ☐	GB2B ☐	LOW ☑	HIGH ☐	
DIFF. OIL	Lrp 7k	DIFF WASHERS			
DOGBONE DRIVE	ST11 ☐	ST12 ☐	BB ☐	ST17 ☐	EVD ☐
WHEELHUB	AM06WL ☐	AM06S-M ☐	AM06W ☐		☐

FRAME FLEX SETTING

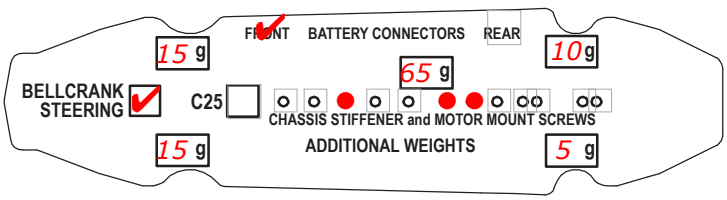

LOWER DECK Soft Aluminum

CHASSIS STIFFENER AM110 ☐ AM115 ☐ ST130 ☐ ST165 ☑

☐ C26 ☐ ST55 ☑ ☐ C26 ☐

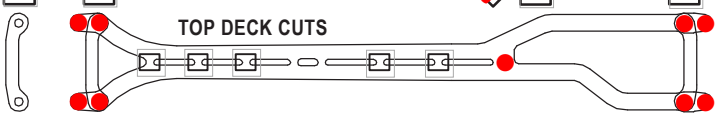

☐ ST09 TOP DECK C27X ☑ VTD ☐ ☐ ST09 ☐

AM98 STD ☐ CUT ☐ AT63 ☐ AT63 ☐ C38 ☐ AM98 STD ☐ CUT ☐

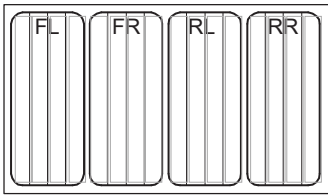

TIRES	FRONT	REAR
BRAND	Volante	
INSERTS		
WHEELS		
ADDITIVE	CS high grip 15 min	

MOTOR LATERAL SHIFT / MM	ACKERMANN SHIMS / MM 1
MOTOR 5t	SERVO Awesomatix
SPUR 116 PINION 29 RATIO 7.60	STEER TRAVEL IN 28° OUT
BODY Pf type s prolight	BATTERY Lrp 6400
WING Std	RECEIVER
ESC Lrp xflow	RADIO
ESC SETTING	
BEST LAPTIME	QUALIF./FINAL POSITION /
CONTACT	

COMMENTS

IFJ + IRJ

RC Maker links