AWESOMATIX A800X

SETUP SHEET
M. Mächler / Arn0
PetitRC.com

NAME	Sam Isaacs	DATE	1/7/18
COUNTRY		TEMP. °C AIR / TRACK	70°F / °C
RACE	2018 Hudy Race--17.5 TC	ASPHALT ☐ (OUTDOOR ☐ INDOOR ☑)	CARPET ☑
TRACK	Prolevel RC	TRACK CONDITION: TECHNICAL ☐ MIXED ☑	FAST ☐
		TRACTION: LOW ☐ MEDIUM ☑	HIGH ☑

FRONT

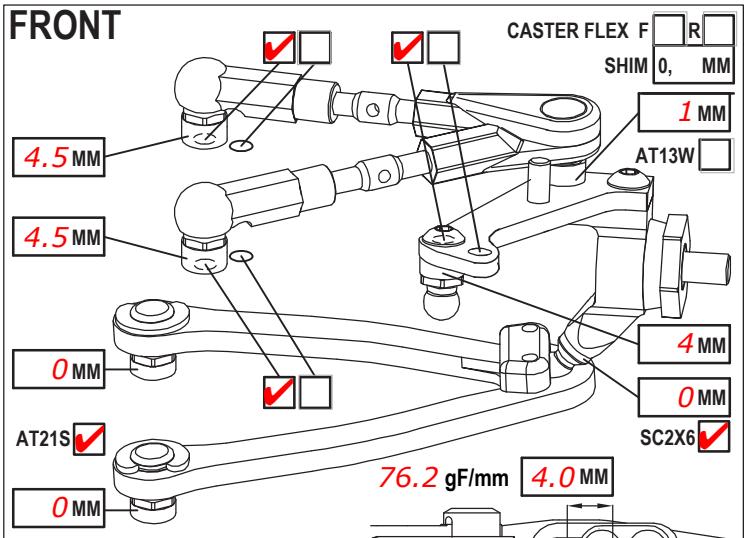

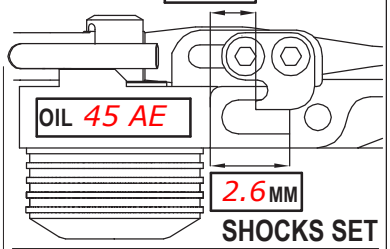

CAMBER ANGLE / °	1		
CASTER ANGLE / °	4		
TOE ANGLE / °	1 out		
RIDE HEIGHT / MM	5.2mm		
DOWNSTOP / MM	1.5mm ORH		
UPWNSTOP / MM			
STABILIZER Ø / MM	1.1		
LOW ARM	C04M1 ☐	AL +.5	☑
STEER. ARM	AM14A ☐	LS	☑
WHEEL SPACER / MM	0		
FRONT DRIVE	GD3 ☐	SPOOL	☑
DIFF. OIL		DIFF WASHERS	

SHOCKS SET

ROTOR	STD ☑		☐
SPRING	STD ☐	S	☑
DAMPER	D2.2 ☑		☐
ACTION	SYM. ☐	ASYM.	☐
SRS/RHS ARR.	I ☑	II	☐
GB2B	☐	LOW	☐ HIGH ☐
DOGBONE DRIVE	ST17 ☐	ST11 ☑	ST12 ☐ BB ☐ ST02 ☐
WHEELHUB	AM06WL ☑	AM06S-M ☐	AM06W ☐ ☐

REAR

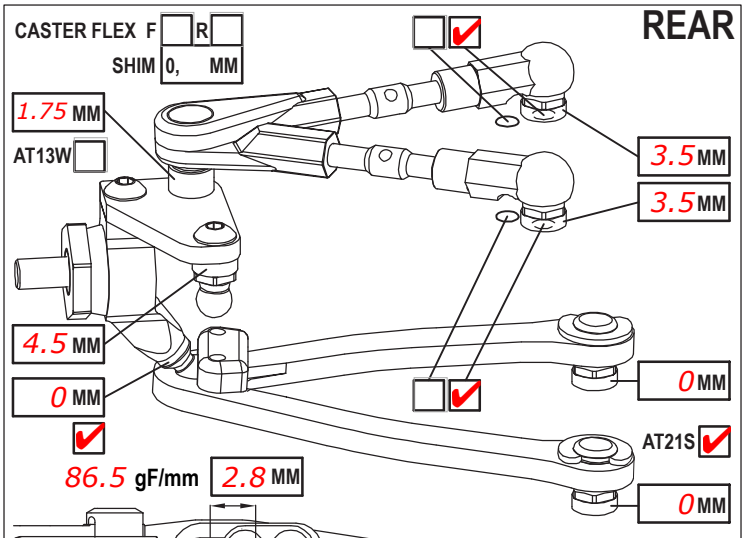

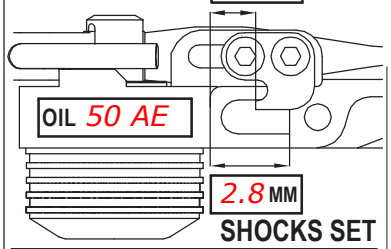

CAMBER ANGLE / °	1.5		
CASTER ANGLE / °	2 long		
TOE ANGLE / °	2.25		
RIDE HEIGHT / MM	5.5mm		
DOWNSTOP / MM	2MM ORH		
UPWNSTOP / MM			
STABILIZER Ø / MM	1.1		
LOW ARM	C04M1 ☐	AL +.5	☑
STEER. ARM	AM23 ☑		☐
WHEEL SPACER / MM	0		
REAR DRIVE	GD3R ☐	GB2B	☑
DIFF. OIL	7K AE	DIFF WASHERS	

SHOCKS SET

ROTOR	STD ☑		☐
SPRING	STD ☐	S	☑
DAMPER	D2.2 ☑		☐
ACTION	SYM. ☐	ASYM.	☐
SRS/RHS ARR.	I ☑	II	☐
GB2B	☑	LOW	☑ HIGH ☐
DOGBONE DRIVE	ST11 ☑	ST12 ☐	BB ☐ ST17 ☐ EVD ☐
WHEELHUB	AM06WL ☑	AM06S-M ☐	AM06W ☐ ☐

FRAME FLEX SETTING

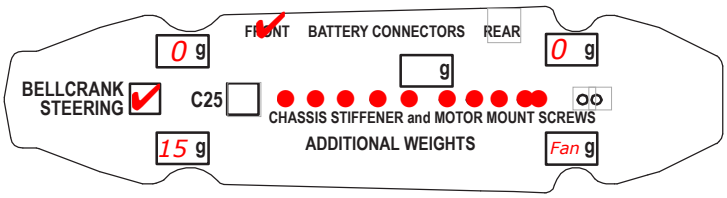

LOWER DECK C01B-XAH HARD alloy

CHASSIS STIFFENER AM110 ☐ AM115 ☑ ST130 ☐ ST165 ☐

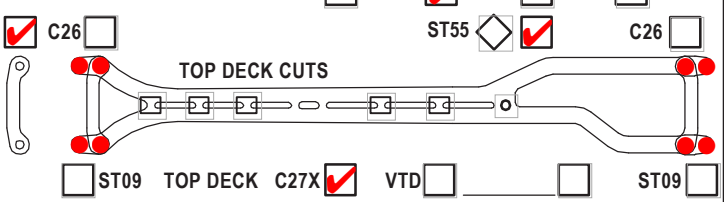

☐ ST09 TOP DECK C27X ☑ VTD ☐ ☐ ST09 ☐

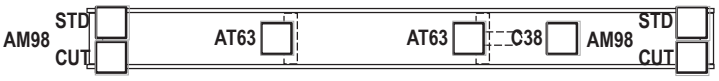

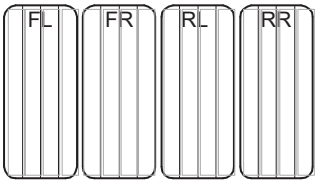

TIRES	FRONT	REAR
BRAND	Gravity Type C	
INSERTS		
WHEELS	Full sauce, minus outer edge of tire	
ADDITIVE	SXT 3.0	

MOTOR LATERAL SHIFT / MM	0	ACKERMANN SHIMS / MM	0
MOTOR		SERVO	AMX 701L
SPUR	PINION 1 RATIO 0.00	STEER TRAVEL IN 26	OUT
BODY	Montech IS 200, nearly max forward	BATTERY	PCR 8200
WING	Montech Racer	RECEIVER	Sanwa
ESC	Tekin	RADIO	Sanwa
ESC SETTING	Tekin		
BEST LAPTIME	9.39	QUALIF./FINAL POSITION	/
CONTACT			

COMMENTS

5 minute tire sauce
DL-A installed
front tires glued with 2 coats at 59MM