AWESOMATIX A800X

SETUP SHEET
M. Mächler / Arn0
PetitRC.com

NAME	Sam Isaacs	DATE	9/16/17
COUNTRY		TEMP. °C AIR / TRACK	85°F / 85°F
RACE	360 Warmup , 17.5 TC	ASPHALT ☐ (OUTDOOR ☐ INDOOR ☐)	CARPET ☑
TRACK	360V2 New Rochelle	TRACK CONDITION: TECHNICAL ☑ MIXED ☑	FAST ☐
		TRACTION: LOW ☐ MEDIUM ☑	HIGH ☑

FRONT

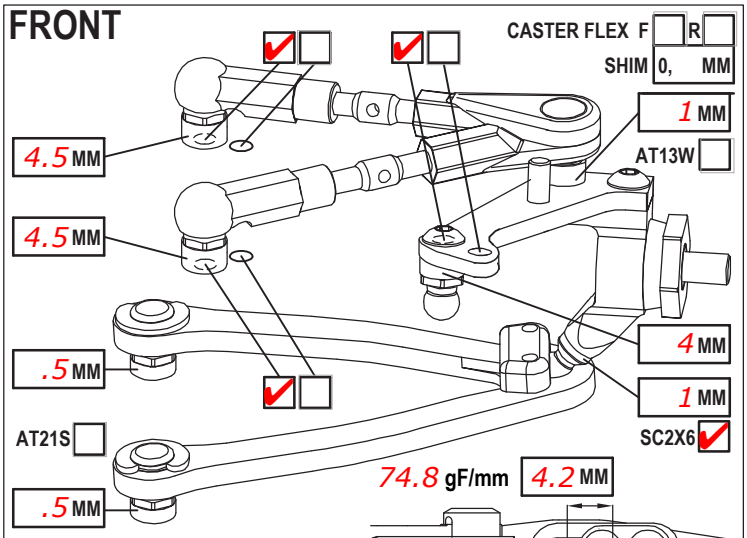

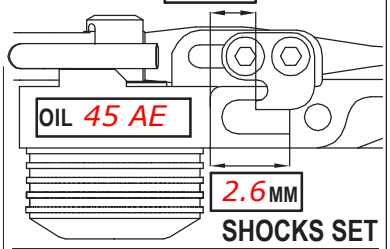

CAMBER ANGLE / °	1	SHOCKS SET	
CASTER ANGLE / °	4		
TOE ANGLE / °	1 out		
RIDE HEIGHT / MM	5.3		
DOWNSTOP / MM	1.5 ORH		
UPWNSTOP / MM		ROTOR STD ☑	☐
STABILIZER Ø / MM	1.1	SPRING STD ☐	S ☑
LOW ARM C04M1 ☐	AL +.5 ☑	DAMPER D2.2 ☑	☐
STEER. ARM AM14A ☑	☐	ACTION SYM. ☐	ASYM. ☐
WHEEL SPACER / MM	0	SRS/RHS ARR. I ☑	II ☐
FRONT DRIVE GD3 ☐	SPOOL ☑ GB2B ☐	LOW ☑	HIGH ☐
DIFF. OIL	DIFF WASHERS		
DOGBONE DRIVE ST17 ☐	ST11 ☑ ST12 ☐ BB ☐		ST02 ☐
WHEELHUB AM06WL ☑	AM06S-M ☐ AM06W ☐		☐

REAR

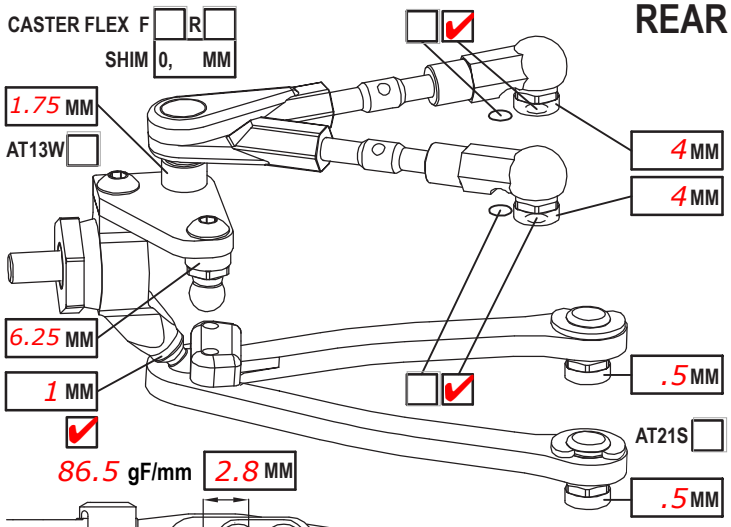

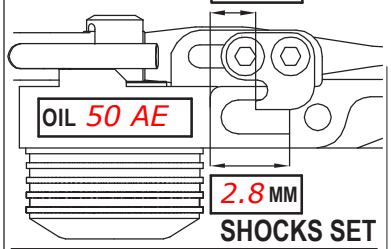

CAMBER ANGLE / °	1.25	SHOCKS SET	
CASTER ANGLE / °	4 long		
TOE ANGLE / °	2		
RIDE HEIGHT / MM	5.6		
DOWNSTOP / MM	2.25 ORH		
UPWNSTOP / MM		ROTOR STD ☑	☐
STABILIZER Ø / MM	1.1	SPRING STD ☐	S ☑
LOW ARM C04M1 ☐	AL +.5 ☑	DAMPER D2.2 ☑	☐
STEER. ARM AM23 ☑	☐	ACTION SYM. ☐	ASYM. ☐
WHEEL SPACER / MM	0	SRS/RHS ARR. I ☑	II ☐
REAR DRIVE GD3R ☐	GB2B ☑	LOW ☑	HIGH ☐
DIFF. OIL 7K	DIFF WASHERS		
DOGBONE DRIVE ST11 ☑	ST12 ☐ BB ☐		ST17 ☐ EVD ☐
WHEELHUB AM06WL ☑	AM06S-M ☐ AM06W ☐		☐

FRAME FLEX SETTING

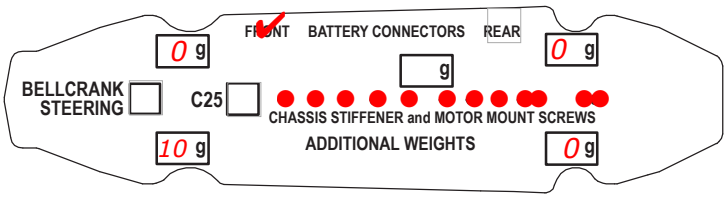

LOWER DECK CO1B-XA (soft alloy)

CHASSIS STIFFENER AM110 ☐ AM115 ☑ ST130 ☐ ST165 ☐

☑ C26 ☐ ST55 ☑ C26 ☐

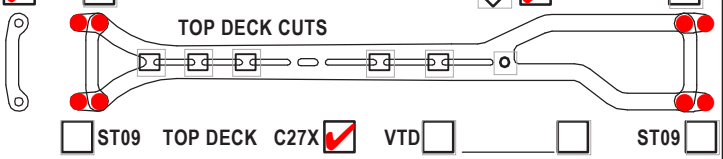

☐ ST09 TOP DECK C27X ☑ VTD ☐ ☐ ST09 ☐

AM98 STD ☐ CUT ☐ AT63 ☐ AT63 ☐ C38 ☐ AM98 STD ☐ CUT ☐

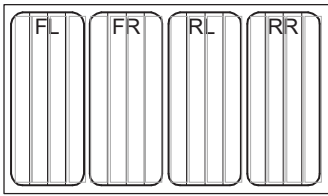

TIRES	FRONT	REAR
BRAND	Gravity Type C	
INSERTS	leave off outer front edge	
WHEELS		
ADDITIVE	SXT 3.0	

MOTOR LATERAL SHIFT / MM 0	ACKERMANN SHIMS / MM 0
MOTOR Monster/R1	SERVO AMX 701
SPUR 96 PINION 43 RATIO 4.24	STEER TRAVEL IN 27 OUT
BODY Montech Nazda 2 max forward	BATTERY PCR 8200
WING Montech Hard 1mm	RECEIVER Sanwa
ESC Hobbywing XR10 Pro	RADIO Sanwa
ESC SETTING	
BEST LAPTIME 12.0	QUALIF./FINAL POSITION /
CONTACT	

COMMENTS

Dl-A installed--ST55 inm stiff position--BSR Hard/heavy front bumper
LS1 Rack with stock (AM14A) arms