# AWESOMATIX A800X

**SETUP SHEET**
M. Mächler / Arn0
PetitRC.com

| | | | |
|---|---|---|---|
| NAME | Max Mächler | DATE | 15-17.09.2017 |
| COUNTRY | Germany | TEMP. °C AIR / TRACK | °C / °C |
| RACE | ADAC Mittelrhein Cup | ASPHALT ☐ (OUTDOOR ☐ INDOOR ☐) | CARPET ☑ |
| TRACK | Nürburgring | TRACK CONDITION TECHNICAL ☐ MIXED ☑ | FAST ☐ |
| | | TRACTION LOW ☐ MEDIUM ☑ | HIGH ☑ |

## FRONT

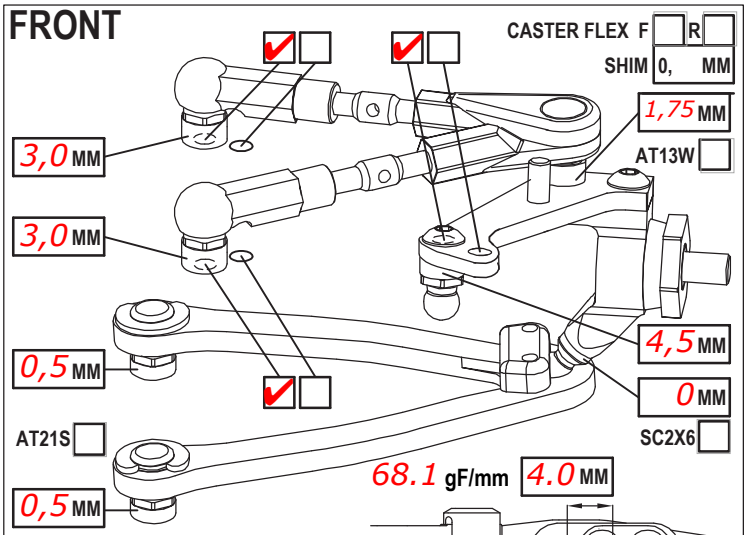


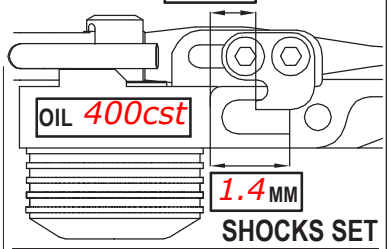


| | | | |
|---|---|---|---|
| CAMBER ANGLE / ° | 2 | | |
| CASTER ANGLE / ° | 5 | | |
| TOE ANGLE / ° | 1 per side | | |
| RIDE HEIGHT / MM | 5,0 | | |
| DOWNSTOP / MM | 4,8 | | |
| UPWNSTOP / MM | - | | |
| STABILIZER Ø / MM | 1,0 | | |
| LOW ARM C04M1 ☐ | 0,5 ☑ | | |
| STEER. ARM AM14A ☐ | LS ☑ | | |
| WHEEL SPACER / MM | 0,5 | | |
| FRONT DRIVE GD3 ☐ | SPOOL ☑ | GB2B ☐ | LOW ☑ HIGH ☐ |
| DIFF. OIL | | DIFF WASHERS | |
| DOGBONE DRIVE | ST17 ☑ | ST11 ☐ ST12 ☐ | BB ☑ ST02 ☐ |
| WHEELHUB | AM06WL ☑ | AM06S-M ☐ AM06W ☐ | ☐ |

**SHOCKS SET**

| | | | |
|---|---|---|---|
| ROTOR | STD ☑ | | ☐ |
| SPRING | STD ☐ | | S ☑ |
| DAMPER | D2.2 ☑ | | ☐ |
| ACTION | SYM. ☐ | | ASYM. ☐ |
| SRS/RHS ARR. | I ☑ | | II ☐ |

## REAR

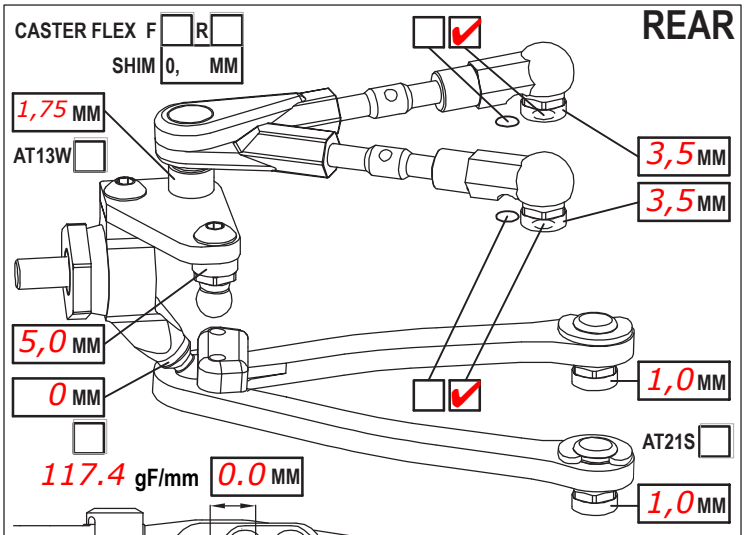


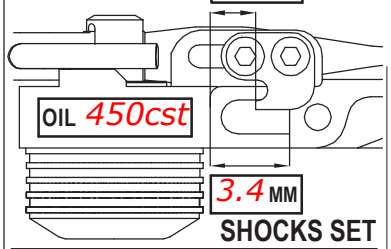


| | | | |
|---|---|---|---|
| CAMBER ANGLE / ° | 2 | | |
| CASTER ANGLE / ° | 0 | | |
| TOE ANGLE / ° | 2,25 | | |
| RIDE HEIGHT / MM | 5,2 | | |
| DOWNSTOP / MM | 3,8 | | |
| UPWNSTOP / MM | - | | |
| STABILIZER Ø / MM | 1,0 | | |
| LOW ARM C04M1 ☐ | 0,5 ☑ | | |
| STEER. ARM AM23 ☑ | | | ☐ |
| WHEEL SPACER / MM | 0,5 | | |
| REAR DRIVE GD3R ☐ | GB2B ☑ | LOW ☑ | HIGH ☐ |
| DIFF. OIL 12.500 | | DIFF WASHERS std. | |
| DOGBONE DRIVE | ST11 ☐ | ST12 ☐ | BB ☑ ST17 ☐ EVD ☐ |
| WHEELHUB | AM06WL ☑ | AM06S-M ☐ | AM06W ☐ ☐ |

**SHOCKS SET**

| | | | |
|---|---|---|---|
| ROTOR | STD ☑ | | ☐ |
| SPRING | STD ☐ | | S ☑ |
| DAMPER | D2.2 ☑ | | ☐ |
| ACTION | SYM. ☐ | | ASYM. ☐ |
| SRS/RHS ARR. | I ☑ | | II ☐ |

## FRAME FLEX SETTING

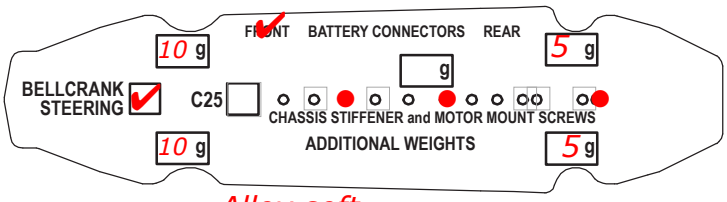


LOWER DECK Alloy soft

CHASSIS STIFFENER AM110 ☐ AM115 ☐ ST130 ☐ ST165 ☑

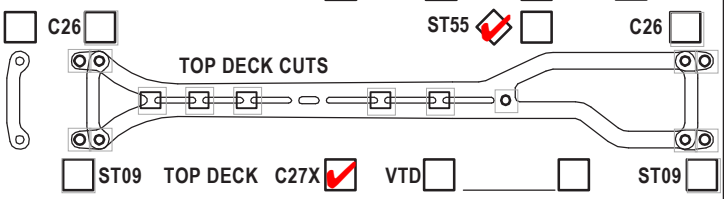


ST09 ☐ TOP DECK C27X ☑ VTD ☐ ☐ ST09 ☐

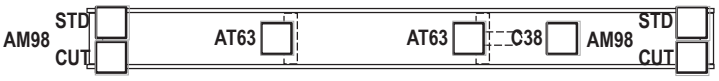


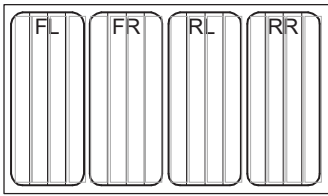


| TIRES | FRONT | REAR |
|---|---|---|
| BRAND | Volante | |
| INSERTS | std. | |
| WHEELS | std. | |
| ADDITIVE | CS High Grip | |

| | |
|---|---|
| MOTOR LATERAL SHIFT / MM 0 | ACKERMANN SHIMS / MM 1 |
| MOTOR Handout 13,5T | SERVO Futaba BLS571 |
| SPUR 100 PINION 38 RATIO 5.00 | STEER TRAVEL IN 23 OUT |
| BODY PF Speed6 ProLite | BATTERY LRP 6400 SS LCG |
| WING ProLite Wing | RECEIVER Sanwa |
| ESC ETS | RADIO Sanwa M12S |
| ESC SETTING 0-Boost | |
| BEST LAPTIME 15,0 | QUALIF./FINAL POSITION 1 / 1 |
| CONTACT Max@Awesomatix.com | |

COMMENTS

FF,FR, RF, RR are AT21 / 0,5mm Shim under ST165 / IFJ Set is used.
Front Spring/damper Holder modified to use Progressive Spring setup!!!!
Progression start at 2,4-2,5mm ride height
On rear part of Topdeck a Ball-link is used for stiff up the bulkhead/Topdeck area.
Rear springs bent up to 110deg.