# AWESOMATIX A800X

**SETUP SHEET**
M. Mächler / Arn0
PetitRC.com

| | | | |
|---|---|---|---|
| NAME | Marcel Geiger | DATE | 05-02-2017 |
| COUNTRY | | TEMP. °C AIR / TRACK | 20°C / 20°C |
| RACE | Practise | TRACK CONDITION | ASPHALT ☐ (OUTDOOR ☐ INDOOR ☑) CARPET ☑ TECHNICAL ☐ MIXED ☑ FAST ☐ |
| TRACK | Arena33 | TRACTION | LOW ☐ MEDIUM ☑ HIGH ☐ |

## FRONT

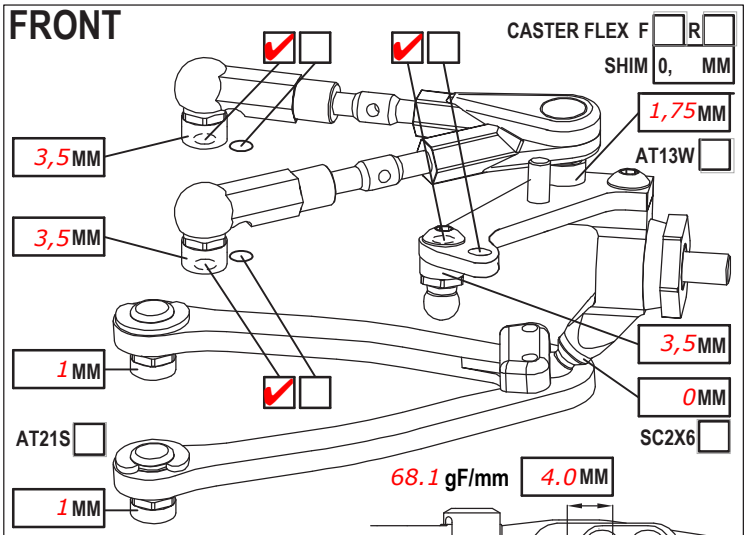


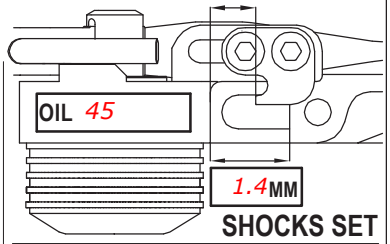


SHOCKS SET

| | | | | |
|---|---|---|---|---|
| CAMBER ANGLE / ° | -2 | | | |
| CASTER ANGLE / ° | -4 | | | |
| TOE ANGLE / ° | -1 | | | |
| RIDE HEIGHT / MM | 5,2 | | | |
| DOWNSTOP / MM | 5,6 | | | |
| UPWNSTOP / MM | | | | |
| STABILIZER Ø / MM | 1,2 | | | |
| LOW ARM | C04M1 ☐ | +0,5 ☑ | | |
| STEER. ARM | AM14A ☑ | ☐ | | |
| WHEEL SPACER / MM | 0 | | | |
| FRONT DRIVE | GD3 ☐ | SPOOL ☑ | GB2B ☐ | LOW ☑ HIGH ☐ |
| DIFF. OIL | DIFF WASHERS | | | |
| DOGBONE DRIVE | ST17 ☑ | ST11 ☐ | ST12 ☐ | BB ☑ ST02 ☐ |
| WHEELHUB | AM06WL ☑ | AM06S-M ☐ | AM06W ☐ | ☐ |

| | | | |
|---|---|---|---|
| ROTOR | STD ☑ | ☐ | |
| SPRING | STD ☐ | S ☑ | |
| DAMPER | D2.2 ☑ | ☐ | |
| ACTION | SYM. ☑ | ASYM. ☐ | |
| SRS/RHS ARR. | I ☑ | II ☐ | |

## REAR

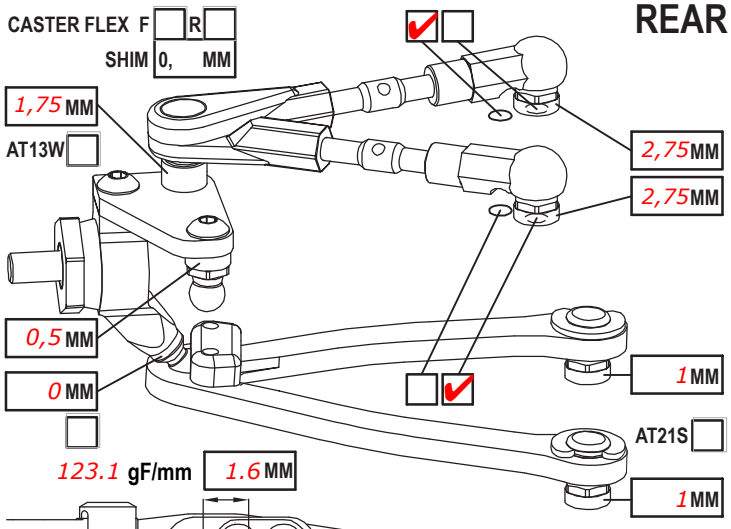


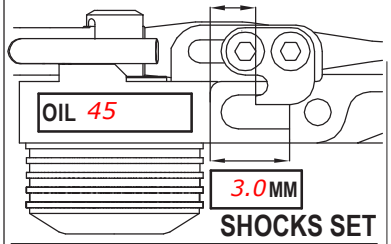


SHOCKS SET

| | | | | |
|---|---|---|---|---|
| CAMBER ANGLE / ° | -2 | | | |
| CASTER ANGLE / ° | -3 | | | |
| TOE ANGLE / ° | 3 | | | |
| RIDE HEIGHT / MM | 5,4 | | | |
| DOWNSTOP / MM | 4,4 | | | |
| UPWNSTOP / MM | | | | |
| STABILIZER Ø / MM | 1,1 | | | |
| LOW ARM | C04M1 ☑ | ☐ | | |
| STEER. ARM | AM23 ☐ | ☐ | | |
| WHEEL SPACER / MM | | | | |
| REAR DRIVE | GD3R ☐ | GB2B ☑ | LOW ☐ | HIGH ☑ |
| DIFF. OIL | 7k | DIFF WASHERS | std. | |
| DOGBONE DRIVE | ST11 ☐ | ST12 ☐ | BB ☑ | ST17 ☐ EVD ☐ |
| WHEELHUB | AM06WL ☑ | AM06S-M ☐ | AM06W ☐ | ☐ |

| | | | |
|---|---|---|---|
| ROTOR | STD ☑ | ☐ | |
| SPRING | STD ☑ | S ☐ | |
| DAMPER | D2.2 ☑ | ☐ | |
| ACTION | SYM. ☐ | ASYM. ☐ | |
| SRS/RHS ARR. | I ☑ | II ☐ | |

## FRAME FLEX SETTING

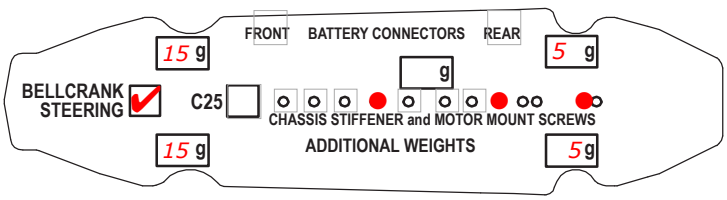


LOWER DECK Alu Soft

CHASSIS STIFFENER AM110 ☐ AM115 ☐ ST130 ☐ ST165 ☑

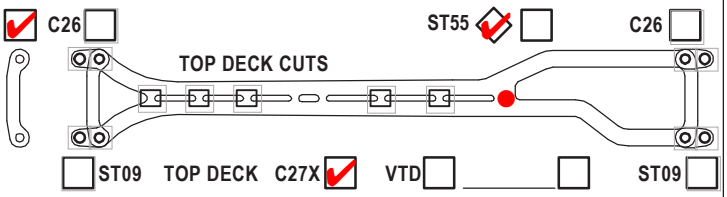


☐ ST09 TOP DECK C27X ☑ VTD ☐ _____ ☐ ST09 ☐

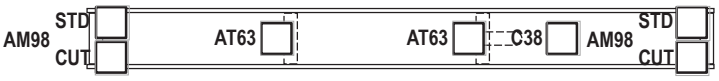


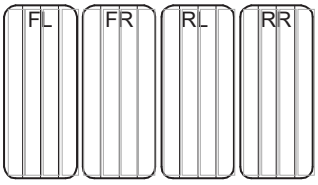


| TIRES | FRONT | REAR |
|---|---|---|
| BRAND | handout | |
| INSERTS | | |
| WHEELS | | |
| ADDITIVE | cs high, 20min, sidewall only in rear | |

| | | | |
|---|---|---|---|
| MOTOR LATERAL SHIFT / MM | | ACKERMANN SHIMS / MM | 1 |
| MOTOR | LRP X20 4.5t | SERVO | MKS HBL575 |
| SPUR 110 PINION 28 RATIO | 7.46 | STEER TRAVEL IN 28 OUT | |
| BODY | LTC LW | BATTERY | LRP 5600 LCG |
| WING | st | RECEIVER | Sanwa |
| ESC | LRP Flow X | RADIO | Sanwa |
| ESC SETTING | ? | | |
| BEST LAPTIME | | QUALIF./FINAL POSITION | / |
| CONTACT | marcel.geiger@gmx.de | | |

COMMENTS

Used prototype AT21-05 in front for toe-out on lower arm. Prototype has same height as std. AT21.
Battery plugs to the front.
Additional 10g behind front bumper.