COMPETITION GRADE HIGH PERFORMANCE RADIO CONTROL RACING CAR CHASSIS KIT

WILDFIRE D06

1/10 4WD ELECTRIC COMPETITION TOURING CAR KIT

SETUP SHEET

vbc racing

DRIVER Sam Forbes DATE January 2015

TRACK NAME Seattle RC Racers RESULT 5th

COMPOSITION Carpet (INDOOR/OUTDOOR) BEST LAP

HUMIDITY TRACK TEMP

GRIP HI MEDIUM LOW SURFACE SMOOTH BUMPY

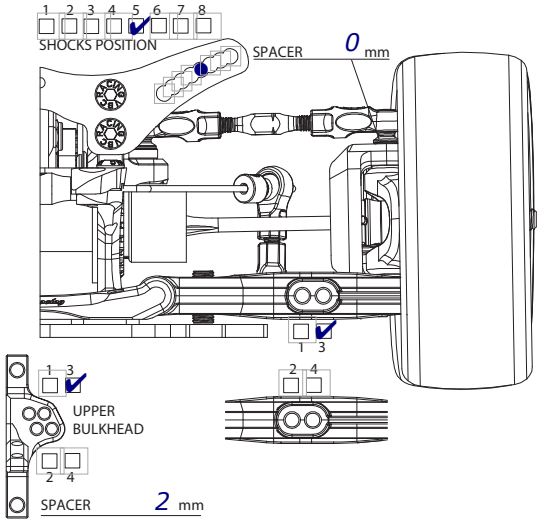

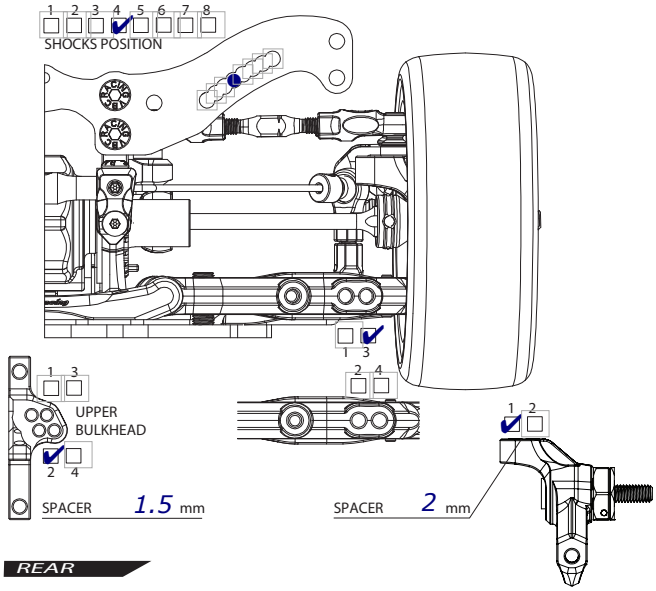

FRONT

GROUND CLEARANCE 5 mm DROOP 2mm over ride height

CAMBER ANGLE 1 ° TOE ANGLE 0.5 out °

CASTER BLOCK 4 ° FRONT DRIVE DIFF (OIL) / DIRECT

STABILIZER 1.2 1.3 WHEEL SPACER 0 mm

SUSPENSION SHIM (FF) 0.5 mm SUSPENSION SHIM (FR) 1 mm

SUSPENSION MOUNT (FF) F00 SUSPENSION MOUNT (FR) C00

WHEELBASE FRONT 3 REAR 1 BELT TENSION Kit

AXLE TYPE / SIZE TWO PIECE JOINT / SINGLE JOINT (STEEL/ALUM) Kit mm

REAR

GROUND CLEARANCE 5.5 mm DROOP 2mm over ride height

CAMBER ANGLE 1.5 ° TOE ANGLE 3.5 °

REAR DRIVE DIFF (OIL 5000) DRIVE CUP ALUMINUM/STEEL

STABILIZER 1.2 1.3 1.4 WHEEL SPACER 0 mm

SUSPENSION SHIM (RF) 0.5 mm SUSPENSION SHIM (RR) 0.5 mm

SUSPENSION MOUNT (RF) C05 SUSPENSION MOUNT (RR) E30

WHEELBASE FRONT 3 REAR 1 BELT TENSION Kit

AXLE TYPE / SIZE TWO PIECE JOINT / SINGLE JOINT (STEEL/ALUM) 49 mm

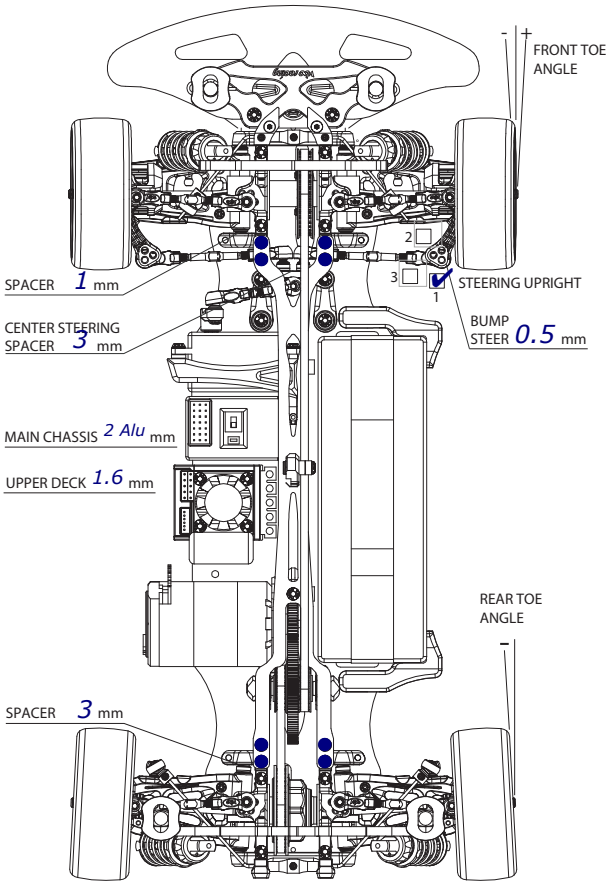

FRONT

SHOCK LENGTH 64 mm

PISTON 4 holes / OTHERS

OIL AE 45

SPRING Yokomo Pink

OIL SEALER CAP S / MS / M / H

REBOUND %

NOTES Yokomo SLF Shock

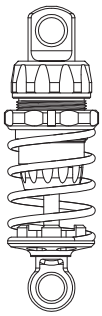

REAR

SHOCK LENGTH 64 mm

PISTON 4 holes / OTHERS

OIL AE 37.5

SPRING Yokomo Blue

OIL SEALER CAP S / MS / M / H

REBOUND %

NOTES Yokomo SLF Shock

MOTOR Reedy 4.5T SPUR 116 T PINION 27 T PITCH 64

TIRE Sweep 32 TIRE INSERT Spec WHEEL Spec

TIRE ADDICTIVE SXT TIME 10 minutes TIRE WARMER None

ESC LRP Flow ESC SETTING

BATTERY IP 6000 BODY Protoform Dart REAR WING Bittydesign HD

REMARKS

D07 rear upright, Yokomo SLF long shocks, Raceberry shock towers

Arn0 - v1.1

www.petitrc.com